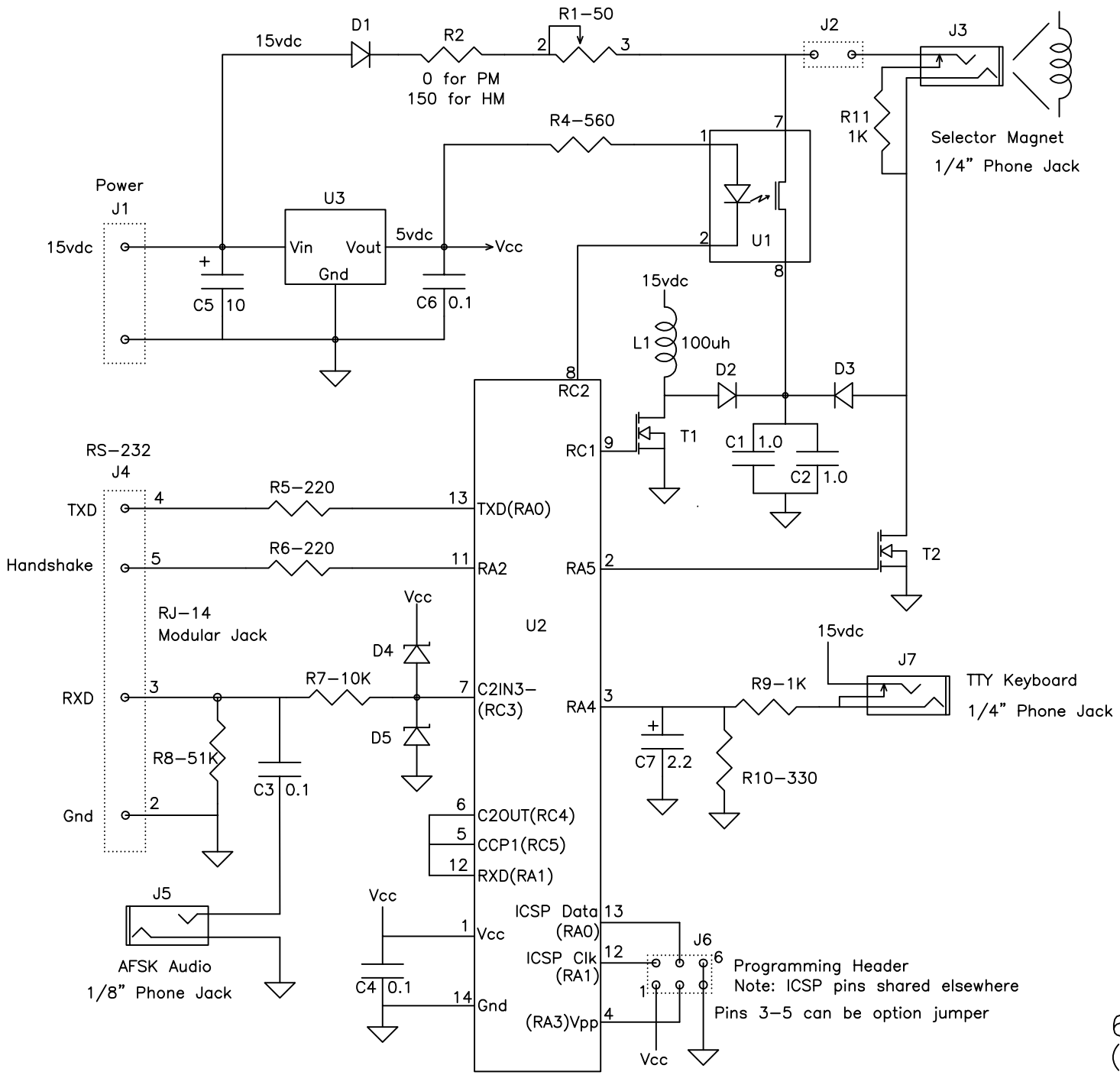

Looking into the modular jack
on the PCB with hook down

'G'round
'R'eceive data into the adapter
'T'ransmit data from the adapter
'H'andshake line from the adapter

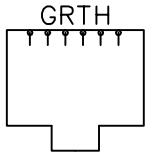

Connections for DB-9 DTE (e.g., PC)

G - 5 (Gnd)
R - 3 (Xmt from PC)
T - 2 (Rcv to PC)
H - 8 (CTS to PC)

Connections for DB-25 DCE

G - 7 (Gnd)
R - 3 (Xmt from DCE)
T - 2 (Rcv to DCE)
H - 4 (CTS to DCE)

60ma Teletype Loop Driver
(Rev A, Apr 2022)

Mike Douglas