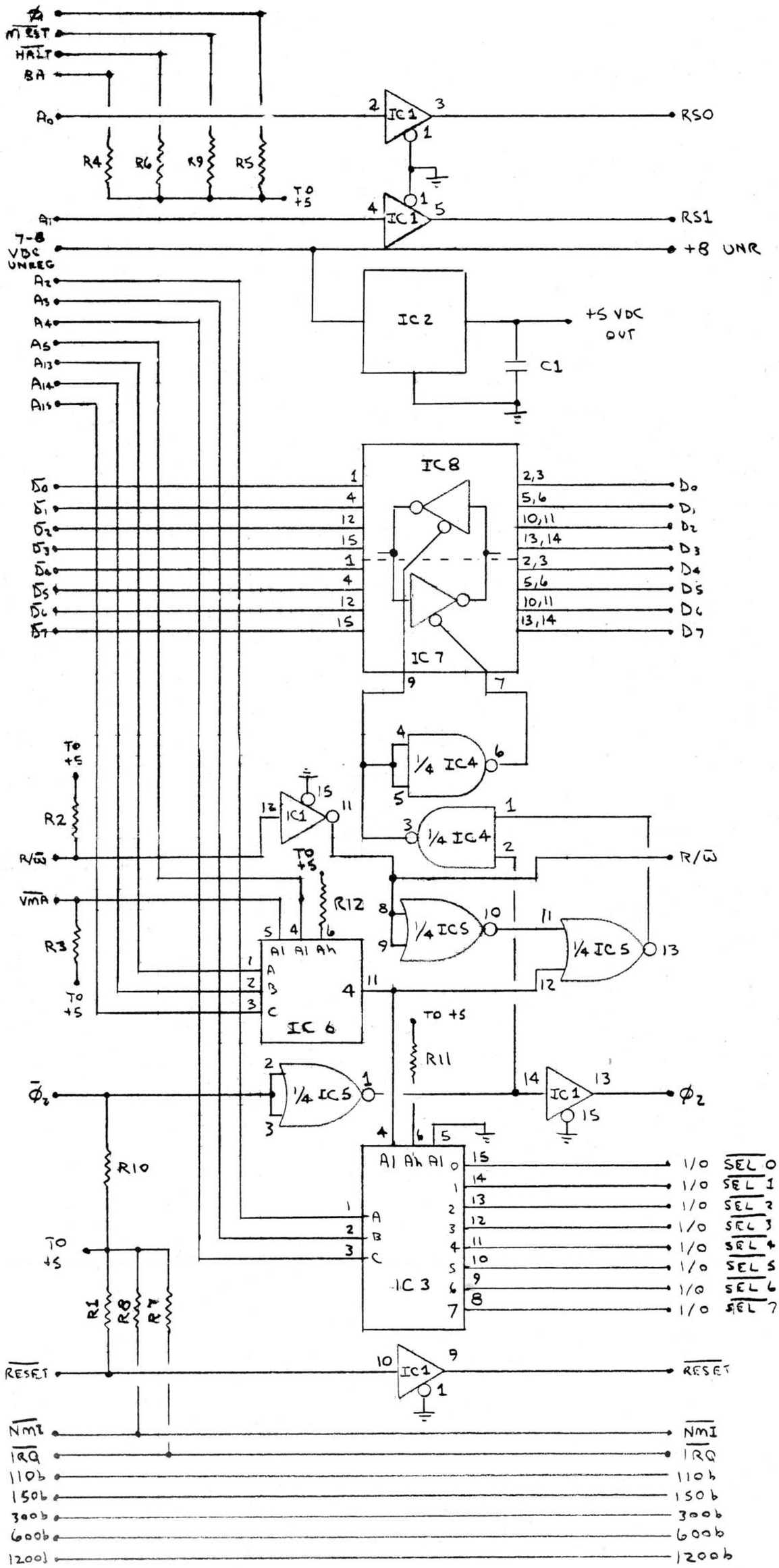

Schematic - MP-B Mother Board