TABLE OF CONTENTS

SECTION	TITLE	ISSUE	DATE
574-121-800TC	33 Keyboard (UK)	*7	December 1974
574-122-800TC	33 Typing Unit (UP)	*10	December 1974
574-123-800TC	33 Call Control Unit (UCC)	*9	December 1974
574-124-800TC	33 Reader (UX)	*6	December 1974
574-125-800TC	33 Tape Punch (UPE)	*6	December 1974
574-126-800TC	33 Cover and Table	*8	December 1974

*Indicates revised sections

HP Computer Museum
www.hpmuseum.net

For research and education purposes only.

33 KEYBOARD (UK)

PARTS

FIGURE	CONTENTS	PAGE
1	Keyboard Basket and Contact Block	2
2	186752 Modification Kit to Provide Locking for Keyboard (Early Design)	3
3	186752 Modification Kit to Provide Locking for Keyboard (Later Design)	3
4	Keyboard Covers	4
5	Keytops	5
6	Keylevers	6
7	Codebar Mechanism	7
8	Codebar Mechanism for Units Equipped with Even Parity	8
9	Codebar Mechanism for Numeric Keyboard	9
10	Reset Mechanism for Self-Contained and Solenoid Reset Keyboards	10
11	Reset Mechanism for Even Parity Keyboard	11
12	Cover for Self-Contained and Solenoid Reset Keyboards	12
13	Cable Components	13
14	185801 Modification Kit to Provide Locking for Keyboard	14
	Numerical Index	15

** Denotes a Painted Part
HF - Light Olive Gray Smooth Vinyl

NOTE: Refer to Section 574-020-800 for Additional 33 Keytop Descriptions.

©1965 by Teletype Corporation
All rights reserved
Printed in U.S.A.

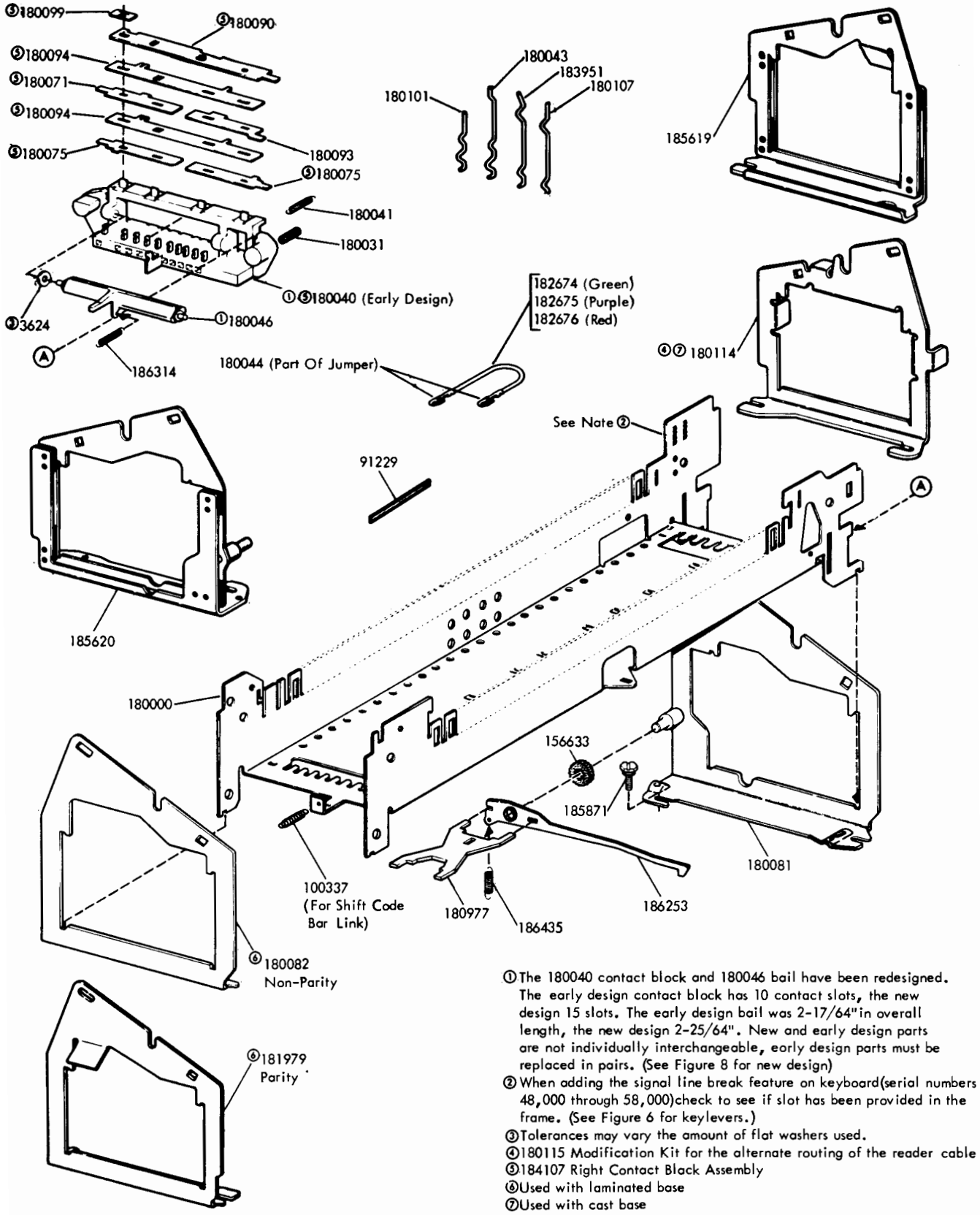

①The 180040 contact block and 180046 bail have been redesigned. The early design contact block has 10 contact slots, the new design 15 slots. The early design bail was 2-17/64"in overall length, the new design 2-25/64". New and early design parts are not individually interchangeable, eorly design parts must be replaced in pairs. (See Figure 8 for new design)

②When adding the signal line break feature on keyboard(serial numbers 48,000 through 58,000)check to see if slot has been provided in the frame. (See Figure 6 for keylevers.)

③Tolerances may vary the amount of flat washers used.

④180115 Modification Kit for the alternate routing of the reader cable

⑤184107 Right Contact Black Assembly

⑥Used with laminated base

⑦Used with cast base

FIGURE 1. KEYBOARD BASKET AND CONTACT BLOCK

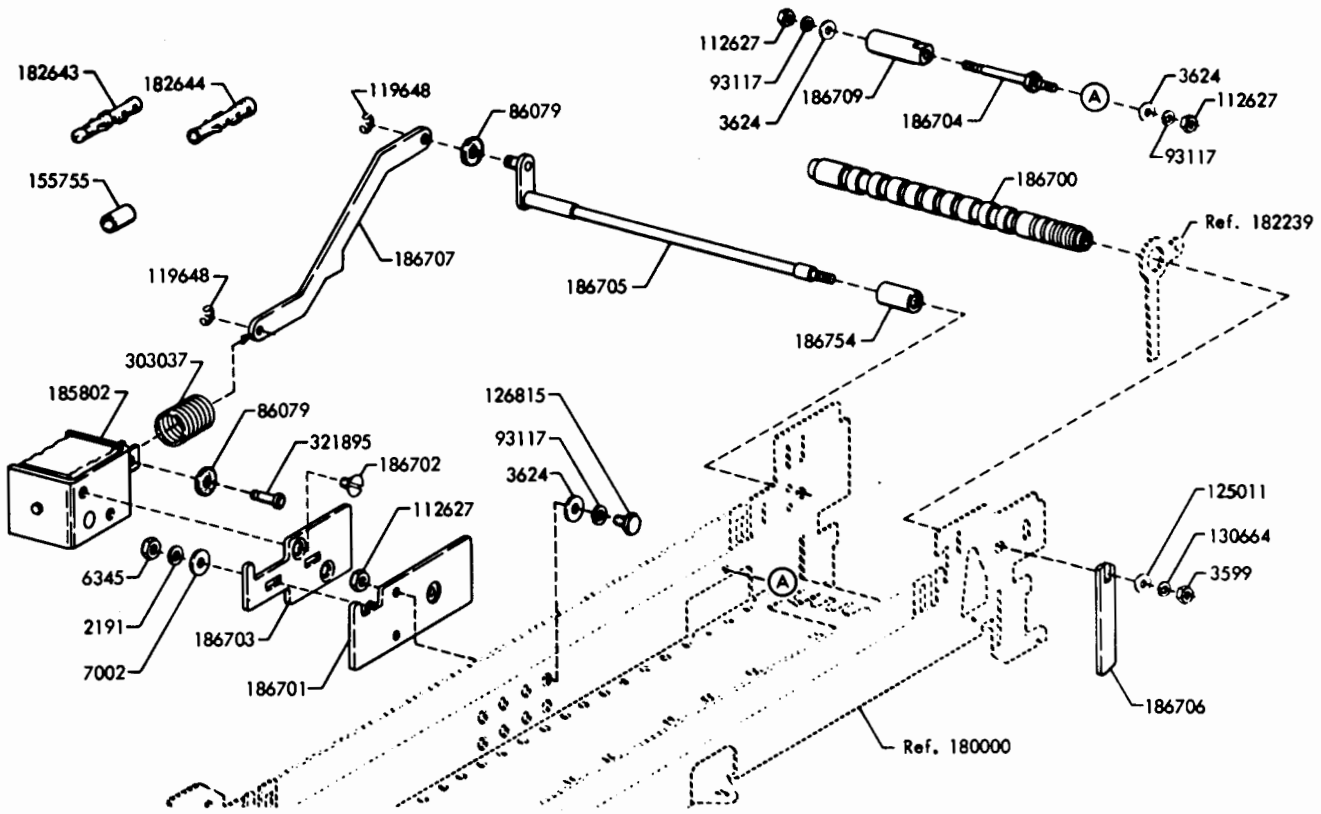

FIGURE 2. 186752 MODIFICATION KIT TO PROVIDE LOCKING FOR KEYBOARD (EARLY DESIGN)

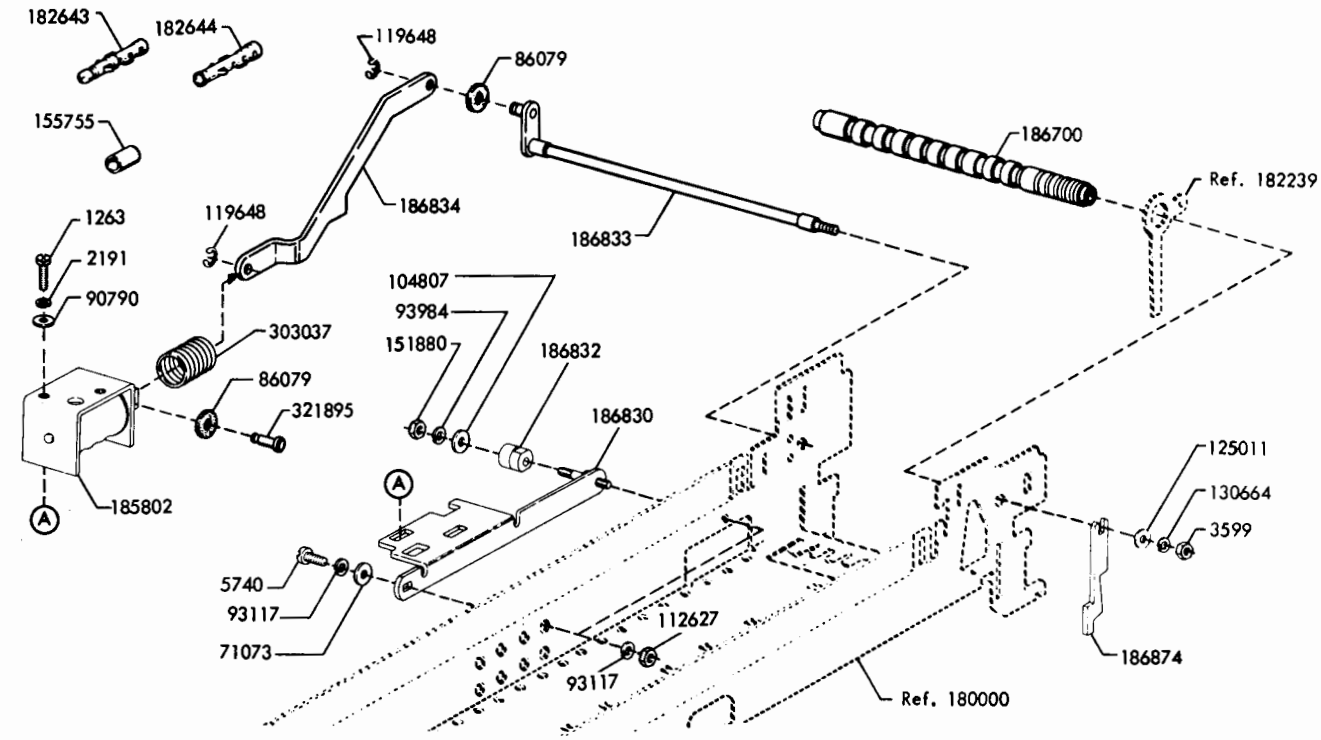

FIGURE 3. 186752 MODIFICATION KIT TO PROVIDE LOCKING FOR KEYBOARD (LATER DESIGN)

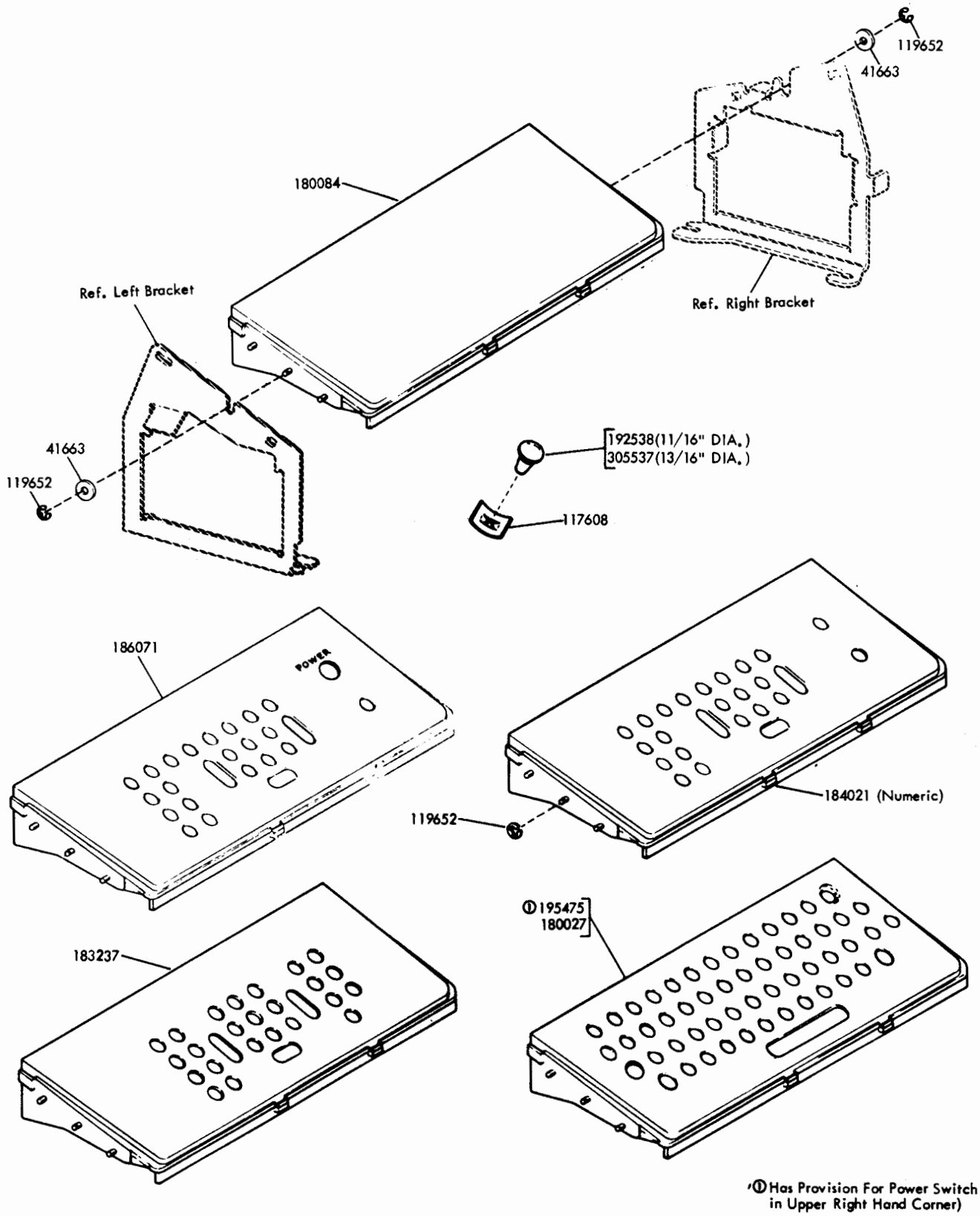

FIGURE 4. KEYBOARD COVERS

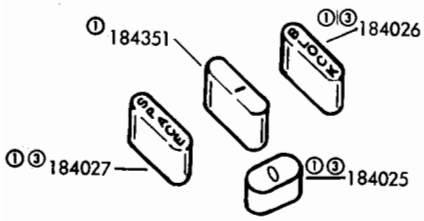

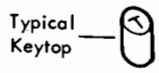

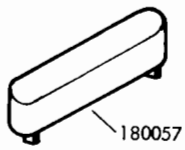

Keytop Description UNSHIFT	SHIFT	Part Number
A		180181
A	SOM	*183891
A		①③184343
B		180194
B		①③184344
C		180192
C		①③184345
C	ETX	185165
D	EOT	180183
D		180278
D		①③184346
E	WRU	180173
E		180259
E	WRU	*183889
F	RU	180184
F		180273
G	BELL	180185
G		180274
G	BELL	*183890
H		180186
H	BS	185163
I	TAB	180178
I		180262
J		180187
K	VT	180188
K		180280
K	⊏	180383
K	I	185090
L	FORM	180189
L		180281
L	\	180385
L	FORM	185164
M		180196
M	⊐	180384
M	I	185093
N	↑	180195
N	BLK	185092
N	^	185150
O	←	180179
O	⌐	185089

Keytop Description UNSHIFT	SHIFT	Part Number
P	@	180180
Q		180171
Q	X ON	*183888
Q	X-ON	184869
Q	RLF	185160
R	TAPE	180174
R		180260
R	FS	185161
S		180282
S	X OFF	180182
S	X OFF	*183892
S		③185394
T	~~TAPE~~	180175
T		180261
T	PR	185162
T		③185395
U		180177
V		180193
W		180172
X		180191
X		③185396
Y		180176
Z		180190
1	!	180160
1		①③184334
1		180264
2	"	180161
2		①③184335
3	#	180162
3		①③184336
4	$	180163
4		①③184337
5	%	180164
5		①③184338
6	&	180165
6		①③184339
7	'	180166
7		①③184340
8	(	180167

Keytop Description UNSHIFT	SHIFT	Part Number
8		①③184341
9	)	180168
9		①③184342
0		180169
Ø		180374
-	=	180170
,	<	180197
.	>	180198
;	+	180199
/	?	180200
:	*	180205
(No Symbol)		① 180299
-		180336
	*	180335
	,	180418
	.	180419
/	■	184895
RUB OUT		①③ 180201
RETURN		①③180202
LINE FEED		①③180203
HERE IS		180206
BREAK		180207
REPT		①③180208
ALT MODE		180257
ESC		180382
EOT		①③180440
DIV		①180441
STORE		①180442
TYPE ORD		①180443
SECT		①180444
SHIFT		180061
CTRL		181253
CTRL		②181971
FS		①184815
GS		①184816
RS		①184817
US		①184818
CLR KYBD		184734
CTRL		185159
TAB		180373

NOTE:
All Keytops are gray with white characters except as noted.

*Gray Keytops with yellow characters.
① Used on Numeric Keyboard.
② Used with parity control.
③ Used on Numeric Self-Contained Keyboard

FIGURE 5. KEYTOPS

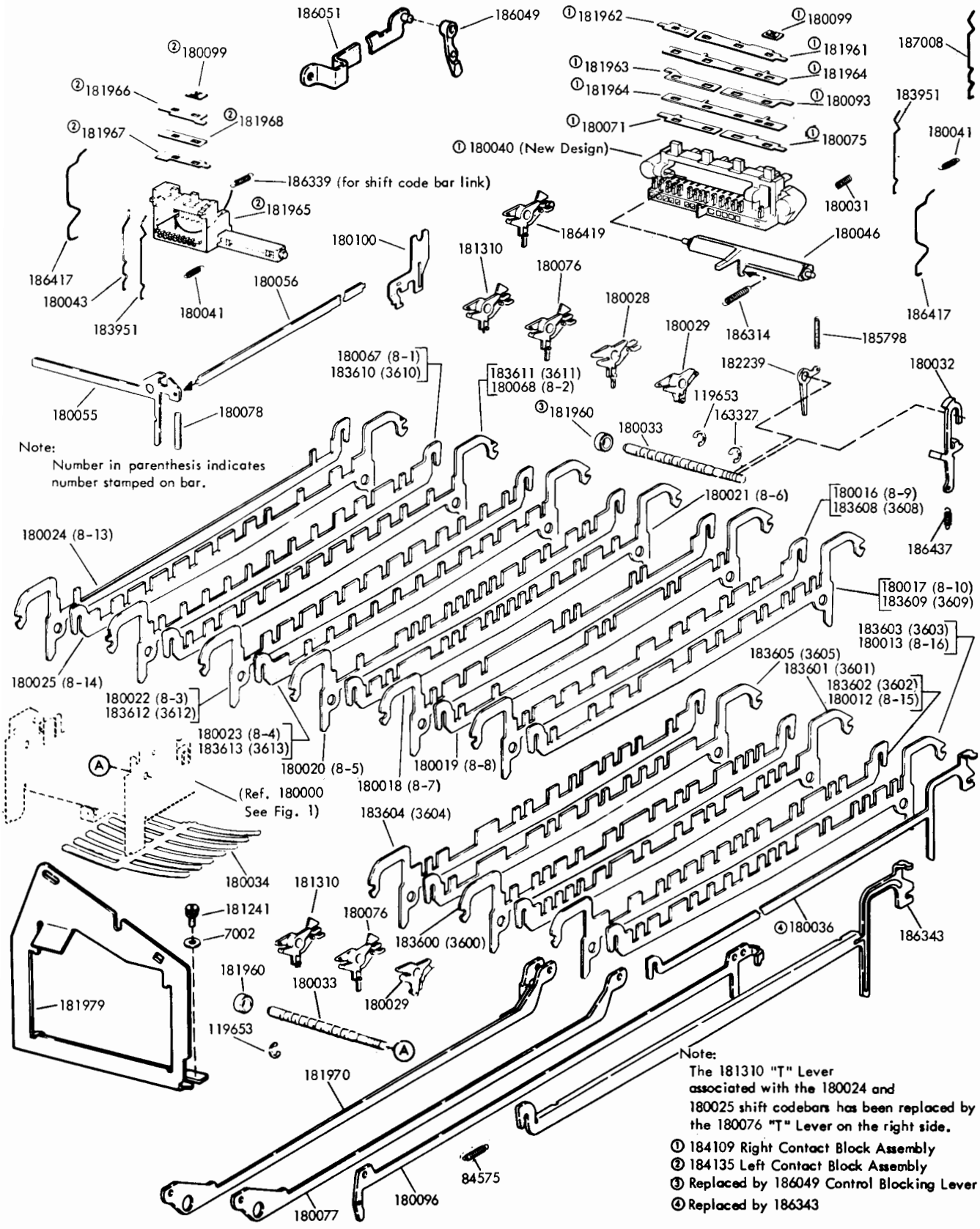

FIGURE 8. CODEBAR MECHANISM FOR UNITS EQUIPPED WITH EVEN PARITY

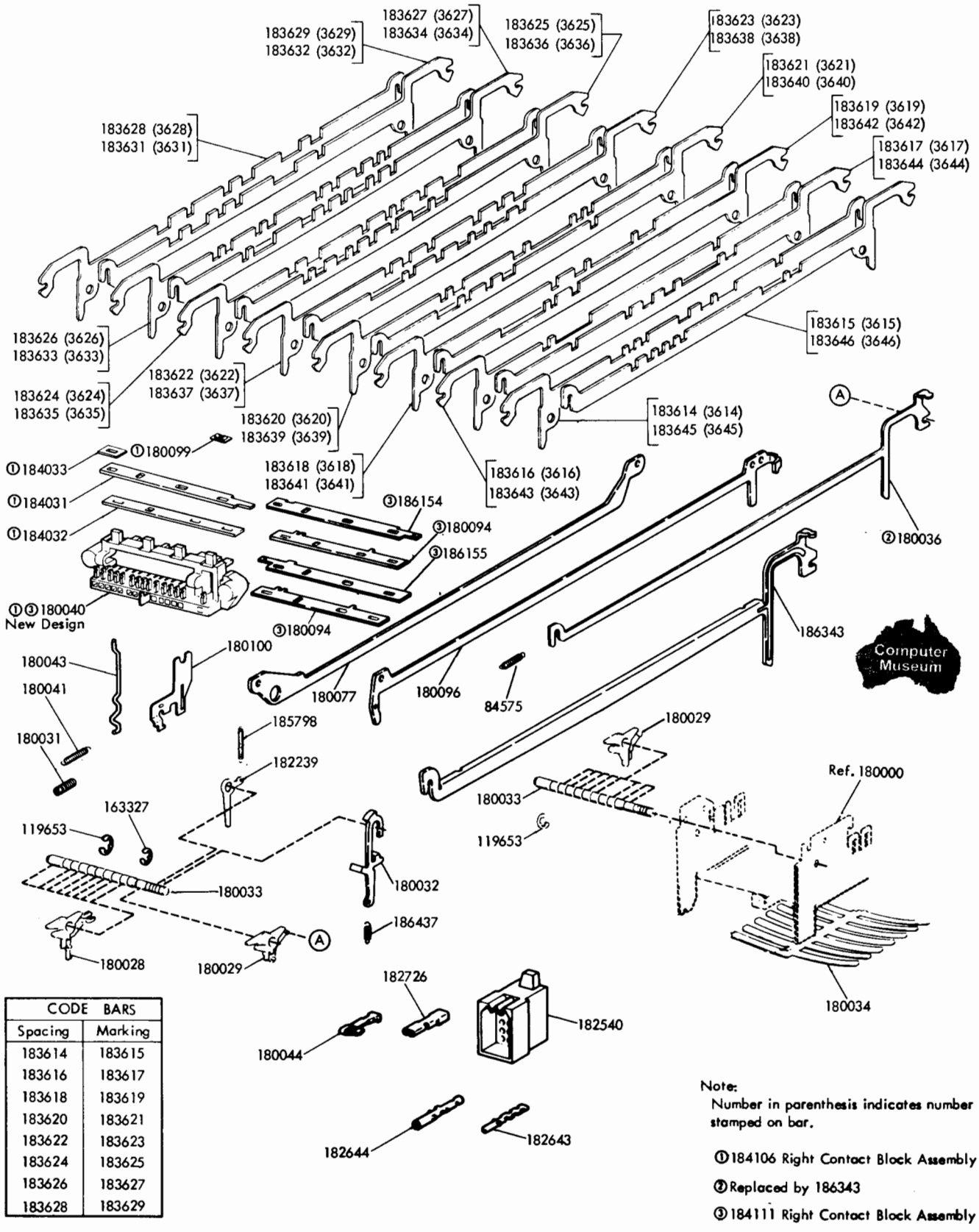

CODE BARS	
Spacing	Marking
183614	183615
183616	183617
183618	183619
183620	183621
183622	183623
183624	183625
183626	183627
183628	183629

Note:
Number in parenthesis indicates number stamped on bar.

①184106 Right Contact Block Assembly

②Replaced by 186343

③184111 Right Contact Block Assembly

FIGURE 9. CODEBAR MECHANISM FOR NUMERIC KEYBOARD

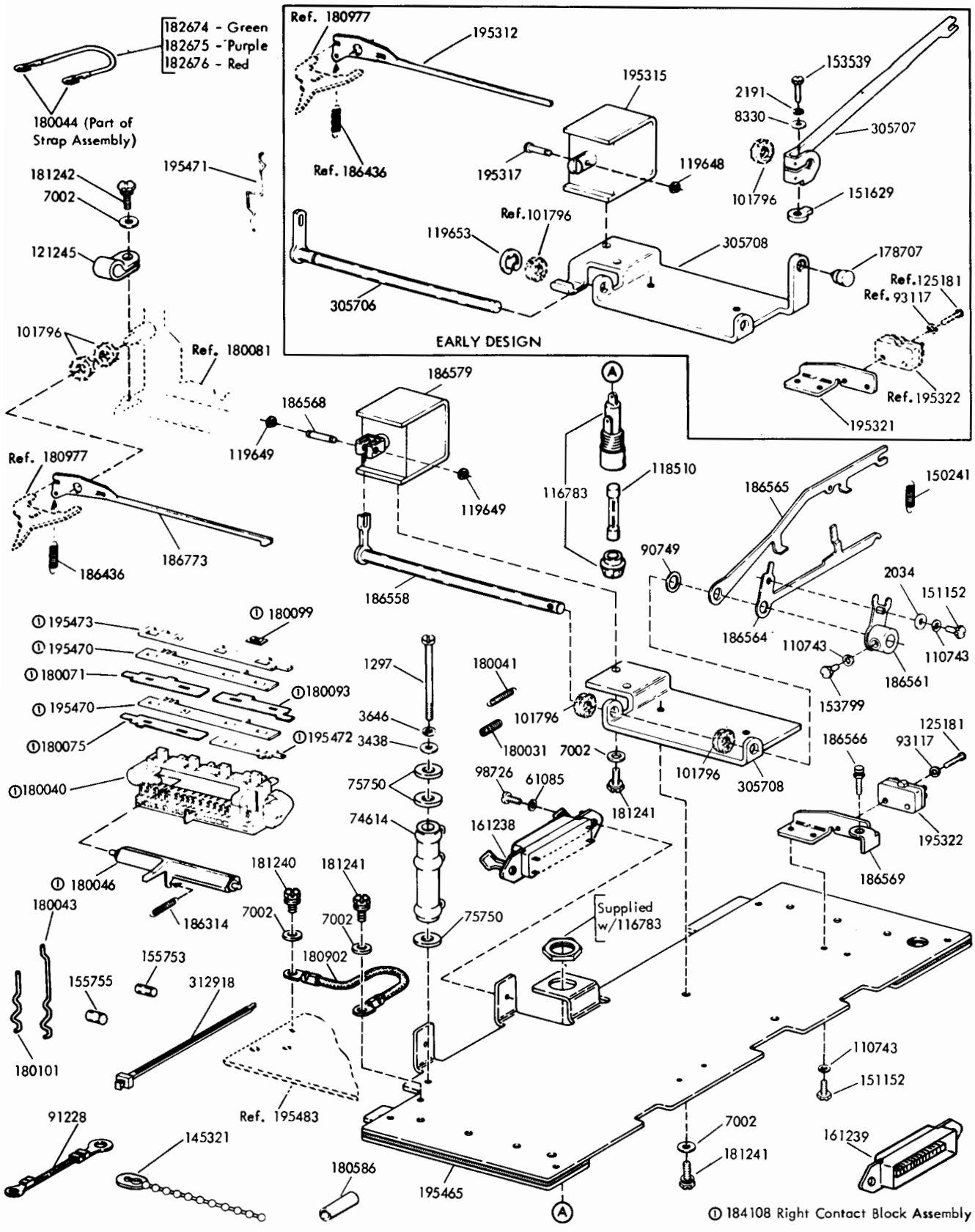

FIGURE 10. RESET MECHANISM FOR SELF-CONTAINED AND SOLENOID RESET KEYBOARDS

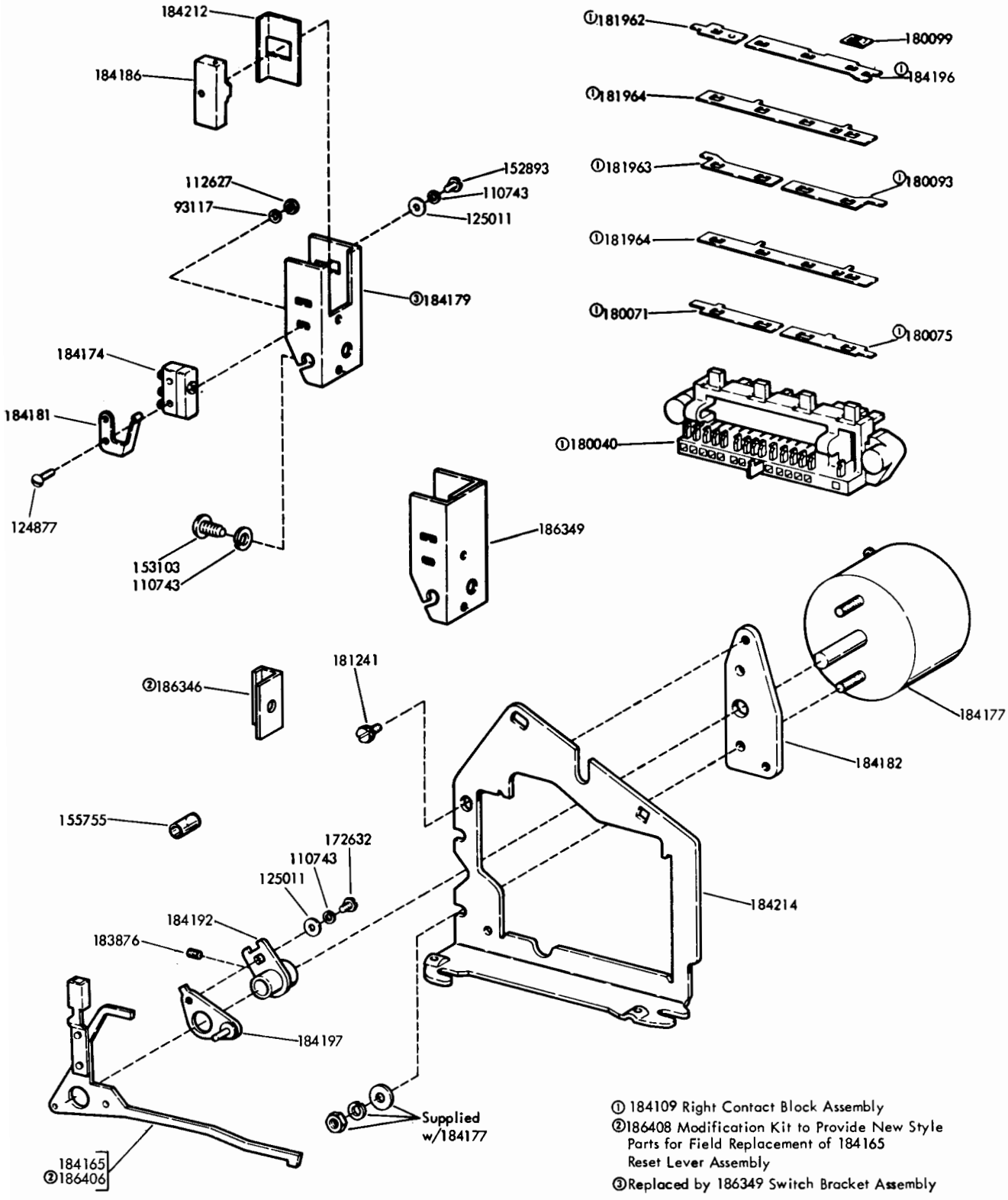

FIGURE 11. RESET MECHANISM FOR EVEN PARITY KEYBOARD

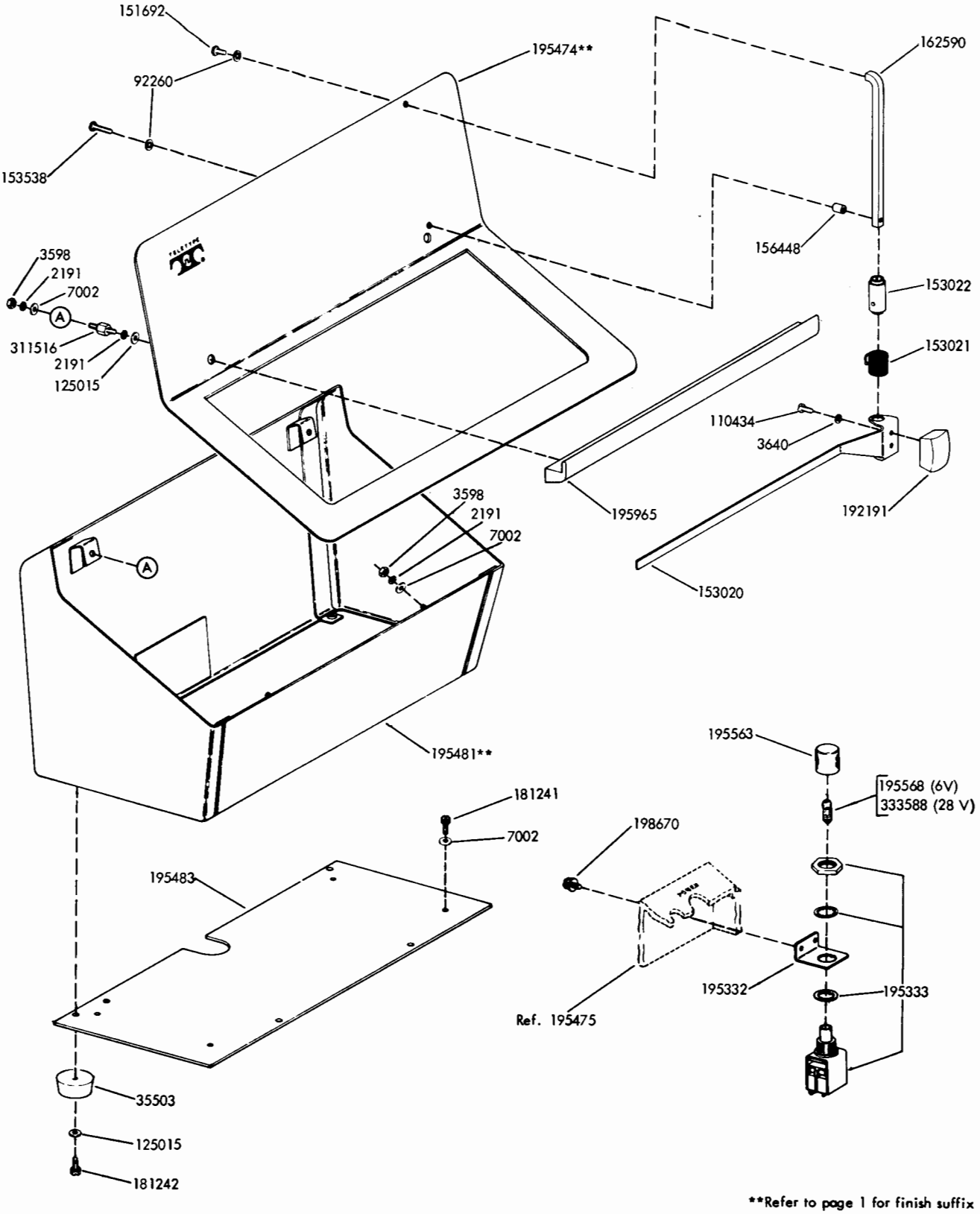

FIGURE 12. COVER FOR SELF-CONTAINED AND SOLENOID RESET KEYBOARDS

Components	CABLE ASSEMBLIES											
	180870	180908	181978	①181969	184034	184051	184198	184199	185845	186156	①187009	195482
320418									X			
155750			X						X			
155752										X		X
161238									X	X		X
171956							X					
171959								X				
171965							X					
171970								X				
180044	X	X	X	X	X	X	X	X	X	X	X	X
180045		X										
180586												X
181892								X				
181973			X				X					
181974			X				X					
182540	X		X	X	X	X		X			X	
182643	X		X	X	X	X	X	X			X	
182644	X		X	X	X	X		X			X	
182674				X							X	
182675				X							X	
182693					X	X						
182726	X	X	X	X	X	X	X	X	X	X	X	X
195614	X		X	X	X	X		X				
320410		X								X		X

① Includes 183135, 184109 Contact Blocks on Figure 8.

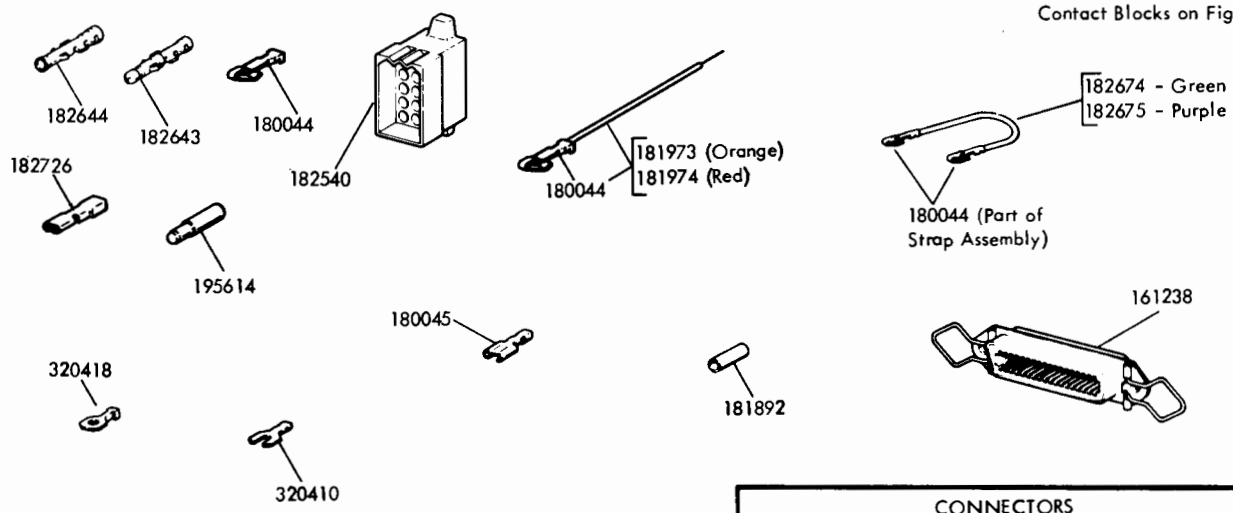

CONNECTORS						
Inner (Length .31)				Outer (Length .25)		
Part No.	I.D.	O.D.	Color	Part No.	I.D.	Color
171956 171959	.180 .261	.204 .297	Green Blue	171965 171970	.261 .375	Yellow Blue

FIGURE 13. CABLE COMPONENTS

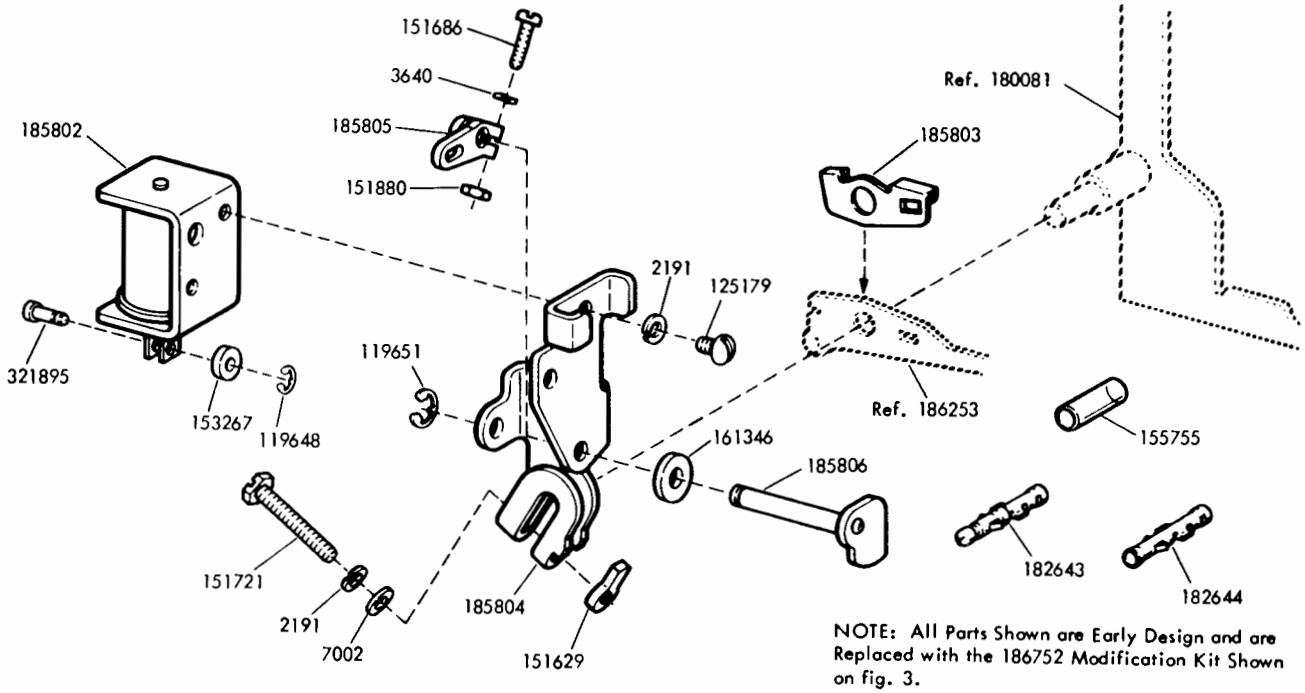

FIGURE 14. 185801 MODIFICATION KIT TO PROVIDE LOCKING FOR KEYBOARD

NUMERICAL INDEX

Part Number	Description and Page Number
1263	Screw, 6-32 x 1/4 Fil 3
1297	Screw, 6-40 x 2-7/16 Fil 10
2034	Washer, Flat 10
2191	Lockwasher 3,10,12,14
3438	Washer, Flat 10
3598	Nut, 6-40 Hex 12
3599	Nut, 4-40 Hex 3
3624	Washer, Flat 2,3
3640	Lockwasher 12,14
3646	Lockwasher 10
5740	Screw, 2-56 x 1/4 Fil 3
6345	Nut, 6-32 Hex 3
7002	Washer, Flat 3,8,10,12,14
8330	Washer, Flat 10
35503	Foot, Rubber 12
41663	Washer, Flat 4
61085	Lockwasher 10
71073	Washer, Flat 3
74614	Resistor, 2,600 Ohm 10
75750	Washer, Insulating 10
80581	Spring 7
84575	Spring 7,8,9
86079	Washer, Felt 3
90749	Shim, .010" Thk 10
90790	Washer, Flat 3
91228	Strap, 2-1/2" Braided 10
91229	Strap, 2" Braided 2
92260	Lockwasher 12
93117	Lockwasher 3,10,11
93984	Lockwasher 3
98726	Screw, 3-48 x 1/4 Fil 10
100337	Spring 2
101796	Washer, Felt 10
104807	Washer, Flat 3
110434	Screw, 4-40 x 3/16 Fil 12
110743	Lockwasher 10,11
112627	Nut, 2-56 Hex 3,11
116783	Holder, Fuse 10
117608	Nut, Speed 4
118510	Fuse, 1/4 Amp 10
119648	Ring, Retaining 3,10,14
119649	Ring, Retaining 10
119651	Ring, Retaining 14
119652	Ring, Retaining 4
119653	Ring, Retaining 7,8,9,10
121245	Clamp, 5/16 ID Cable 10
124877	Screw, 2-56 x 1/2 Rd 11
125011	Washer, Flat 3,11
125015	Washer, Flat 12
125179	Screw, 6-32 x 3/16 Rd 14
125181	Screw, 2-56 x 3/8 Fil 10
126815	Screw, 2-56 x 15/64 Hex 3
130664	Lockwasher 3
145321	Tie, Cable 10
150241	Spring 10
151152	Screw, 4-40 x 3/16 Hex 10
151629	Nut, 6-40 Lug 10,14
151686	Screw, 6-40 x 3/8 Fil 14
151692	Screw, 6-40 x 3/16 Fil 12
151721	Screw, 6-40 x 3/4 Hex 14
151880	Nut, 4-40 Hex 3,14
152893	Screw, 4-40 x 1/4 Hex 11
153020	Guide, Line 12
153021	Spring, Torsion 12
153022	Bushing 12
153103	Screw, 4-40 Self-Tapping 11
153267	Washer, Felt 3,14
153538	Screw, 6-40 x 7/16 Hex 12
153539	Screw, 6-40 x 11/16 Hex 10
153799	Screw, 4-40 x 21/64 Hex 10
155750	Sleeve, 3/32 ID x 1/2" Lg Insulating 13
155752	Sleeve, 5/64 ID x 1/2" Lg
155753	Sleeve, 1/8 ID x 1/2" Lg
155755	Sleeve, 11/64 ID x 5/8" Lg Insulating 3,10,11,14
156448	Bushing 12
156633	Washer, Felt 2
161238	Connector, 36 Pt Receptacle 10,13
161239	Connector, 36 Pt Plug 10
161346	Washer, Felt 14
162590	Shaft 12
163327	Ring, Retaining 7,8,9
171759	Cable Assembly 13
171956	Connector, Green Shielding 13
171959	Connector, Blue Shielding 13
171965	Connector, Yellow Shielding 13
171970	Connector, Blue Shielding 13
172632	Screw, 4-40 x 3/16 Hex 11
178707	Bumper, Rubber 10
180000	Frame, Keyboard 2,3,7,8,9
180012	Codebar,No. 1 Rear 7,8
180013	Codebar,No. 1 Front 7,8
180014	Codebar,No. 2 Rear 7
180015	Codebar,No. 2 Front 7
180016	Codebar,No. 3 Rear 7,8
180017	Codebar,No. 3 Front 7,8
180018	Codebar,No. 4 Rear 7,8
180019	Codebar,No. 4 Front 7,8
180020	Codebar,No. 5 Rear 7,8
180021	Codebar,No. 5 Front 7,8
180022	Codebar,No. 6 Rear 7,8
180023	Codebar,No. 5 Front 7,8
180024	Codebar,No. 5 Rear 7,8
180025	Codebar,No. 5 Front 7,8
180027	Cover, Keyboard 4
180028	Lever 7,8,9
180029	Lever 7,8,9
180030	Lever, Latch 7
180031	Spring, Compression 2,8,9,10
180032	Lever, Non-Repeat 7,8,9
180033	Shaft 7,8,9
180034	Spring, Flat 7,8,9
180036	Codebar, Universal 8,9
180040	Block, Contact 2,8,9,10,11
180041	Spring 2,8,9,10
180043	Wire, Contact 2,8,9,10
180044	Terminal, Tab Type 2,7,9,10,13
180045	Terminal, Tab Type 13
180046	Bail, Contact Reset 2,8,10
180048	Keylever 6
180049	Keylever 6
180050	Keylever 6
180051	Keylever 6
180052	Keylever, Shift 6
180054	Keylever, Spacebar 6,7
180055	Keylever, Spacebar 7,8
180056	Link, Space 7,8
180057	Spacebar 5,7
180061	Keytop 5
180064	Keylever, Repeat 6
180065	Lever, Link Break 7
180066	Keylever 6
180067	Codebar, No. 7 Rear 7,8
180068	Codebar, No. 7 Front 7,8
180069	Keylever, Line Break 6

NUMERICAL INDEX (Continued)

Part Number	Description and Page Number
180071	Terminal 2,8,10,11
180072	Keylever, Line Break 6
180075	Terminal, Line Break 2,8, 10,11
180076	Lever, No. 5 Pulse 7,8
180077	Link 7,8,9
180078	Spring, Compression 6,7,8
180081	Bracket, Right Keyboard 2,10,14
180082	Bracket, Left Keyboard 2
180083	Spring 7
180084	Cover, Keyboard 4
180090	Terminal, Common 2
180093	Terminal 2,8,10,11
180094	Insulator 2,9
180096	Link 7,8,9
180099	Fastener 2,8,9,10,11
180100	Guide 7,8,9
180101	Wire, Contact 2,10
180106	Keylever 6
180107	Detent 2
180114	Bracket, Left Keyboard 2
180115	Modification Kit 2
180116	Keylever 6
180160	Keytop 5
180161	Keytop 5
180162	Keytop 5
180163	Keytop 5
180164	Keytop 5
180165	Keytop 5
180166	Keytop 5
180167	Keytop 5
180168	Keytop 5
180169	Keytop 5
180170	Keytop 5
180171	Keytop 5
180172	Keytop 5
180173	Keytop 5
180174	Keytop 5
180175	Keytop 5
180176	Keytop 5
180177	Keytop 5
180178	Keytop 5
180179	Keytop 5
180180	Keytop 5
180181	Keytop 5
180182	Keytop 5
180183	Keytop 5
180184	Keytop 5
180185	Keytop 5
180186	Keytop 5
180187	Keytop 5
180188	Keytop 5
180189	Keytop 5
180190	Keytop 5
180191	Keytop 5
180192	Keytop 5
180193	Keytop 5
180194	Keytop 5
180195	Keytop 5
180196	Keytop 5
180197	Keytop 5
180198	Keytop 5
180199	Keytop 5
180200	Keytop 5
180201	Keytop 5
180202	Keytop 5
180203	Keytop 5
180205	Keytop 5
180206	Keytop 5
180207	Keytop 5
180208	Keytop 5
180257	Keytop 5
180259	Keytop 5
180260	Keytop 5
180261	Keytop 5
180262	Keytop 5
180264	Keytop 5
180273	Keytop 5
180274	Keytop 5
180278	Keytop 5
180280	Keytop 5
180281	Keytop 5
180282	Keytop 5
180299	Keytop 5
180335	Keytop 5
180336	Keytop 5
180373	Keytop 5
180374	Keytop 5
180382	Keytop 5
180383	Keytop 5
180384	Keytop 5
180385	Keytop 5
180418	Keytop 5
180419	Keytop 5
180440	Keytop 5
180441	Keytop 5
180442	Keytop 5
180443	Keytop 5
180444	Keytop 5
180586	Sleeve, 5-32 ID x 21/32" Lg Insulating 10,13
180870	Cable Assembly 13
180902	Jumper, 3-1/2" Braided 10
180908	Cable Assembly 13
180977	Plate w/Stud 2,10
181240	Screw w/Lockwasher, 6-40 x 3/16 Hex 10
181241	Screw w/Lockwasher, 6-40 x 1/4 Hex 8,10,11,12
181242	Screw w/Lockwasher, 6-40 x 5/16 Hex 10,12
181253	Keytop 5
181254	Keylever 6
181255	Keylever 6
181310	Lever 7,8
181892	Sleeve, 9/64 ID x 1" Lg Insulating 13
181960	Spacer, .144" Thk 8
181961	Terminal 8
181962	Terminal 8,11
181963	Terminal, Parity 8,11
181964	Insulator 8,11
181965	Block, Contact 8
181966	Terminal 8
181967	Terminal 8
181968	Insulator 8
181969	Cable Assembly 13
181970	Link w/Extension 8
181971	Keytop 5
181973	Jumper, 3-1/2" Orange 13
181974	Jumper, 3" Red 13
181975	Keylever 6
181976	Keylever 6
181978	Cable Assembly 13
181979	Bracket, Left Keyboard 2,8
182239	Latchlever 3,7,8,9
182540	Connector, 15 Pt Plug Type 7,9,13
182643	Terminal, Plug Type 3,7,9,13,14
182644	Terminal, Receptacle Type 3,7,9,13,14
182674	Jumper, 2-1/4" Green 2,10,13
182675	Jumper, 2-1/4" Purple 2,10,13
182676	Jumper, 2-1/4" Red 2,10

NUMERICAL INDEX (Continued)

Part Number	Description and Page Number
182693	Jumper, 2-1/4" Orange 13
182726	Terminal, Receptacle Type 7,9,13
182693	Jumper, 2-1/4" Orange 13
183135	Cover 13
183236	Keylever, Repeat 6
183237	Cover, Keyboard 4
183238	Keylever 6
183600	Codebar 8
183601	Codebar 8
183602	Codebar 8
183603	Codebar 8
183604	Codebar 8
183605	Codebar 8
183608	Codebar 8
183609	Codebar 8
183610	Codebar 8
183611	Codebar 8
183612	Codebar 8
183613	Codebar 8
183614	Codebar 9
183615	Codebar 9
183616	Codebar 9
183617	Codebar 9
183618	Codebar 9
183619	Codebar 9
183620	Codebar 9
183621	Codebar 9
183622	Codebar 9
183623	Codebar 9
183624	Codebar 9
183625	Codebar 9
183626	Codebar 9
183627	Codebar 9
183628	Codebar 9
183629	Codebar 9
183631	Codebar 9
183632	Codebar 9
183633	Codebar 9
183634	Codebar 9
183635	Codebar 9
183636	Codebar 9
183637	Codebar 9
183638	Codebar 9
183639	Codebar 9
183640	Codebar 9
183641	Codebar 9
183642	Codebar 9
183643	Codebar 9
183644	Codebar 9
183645	Codebar 9
183646	Codebar 9
183647	Codebar 7
183648	Codebar 7
183649	Codebar 7
183852	Pin 3
183876	Setscrew, 6-32 11
183888	Keytop 5
183889	Keytop 5
183890	Keytop 5
183891	Keytop 5
183892	Keytop 5
183951	Wire, Contact 8
184021	Cover, Keyboard 4
184022	Keylever 6
184023	Keylever 6
184024	Keylever 6
184025	Keytop 5
184026	Keytop 5
184027	Keytop 5
184031	Terminal 9
184032	Insulator, .031" Thk 9
184033	Spacer, .035" Thk 9
184034	Cable Assembly 13
184051	Cable Assembly 13
184106	Block Assembly, Right Contact 9
184107	Block Assembly, Right Contact 2
184108	Block Assembly, Right Contact 10
184109	Block Assembly, Right Contact 8,11,13
184111	Block Assembly, Right Contact 9
184135	Block Assembly, Left Contact 8
184165	Lever, Reset 11
184174	Switch, SP-DT 11
184177	Solenoid, Rotary 11
184179	Bracket 11
184181	Actuator 11
184182	Plate 11
184186	Switch, Reed 11
184192	Plate w/Hub 11
184196	Terminal 11
184197	Plate w/Stud 11
184198	Cable Assembly 13
184199	Cable Assembly 13
184212	Guide 11
184214	Bracket, Right 11
184334	Keytop 5
184335	Keytop 5
184336	Keytop 5
184337	Keytop 5
184338	Keytop 5
184339	Keytop 5
184340	Keytop 5
184341	Keytop 5
184342	Keytop 5
184343	Keytop 5
184344	Keytop 5
184345	Keytop 5
184346	Keytop 5
184351	Keytop 5
184734	Keytop 5
184815	Keytop 5
184816	Keytop 5
184817	Keytop 5
184818	Keytop 5
184869	Keytop 5
184895	Keytop 5
185089	Keytop 5
185090	Keytop 5
185092	Keytop 5
185093	Keytop 5
185150	Keytop 5
185159	Keytop 5
185160	Keytop 5
185161	Keytop 5
185162	Keytop 5
185163	Keytop 5
185164	Keytop 5
185165	Keytop 5
185394	Keytop 5
185395	Keytop 5
185396	Keytop 5
185619	Frame, Left Keyboard 2
185620	Frame, Right Keyboard 2
185780	Spring, Compression 6
185798	Spring 7,8,9
185801	Modification Kit 1,14
185802	Solenoid 3
185803	Clip 14
185804	Bracket 14
185805	Lever 14
185806	Shaft 14
185845	Cable Assembly 13
185871	Screw w/Lockwasher, 8-32 x 3/8 Hex 2
186049	Lever 8
186051	Link 8

NUMERICAL INDEX (Continued)

Part Number	Description and Page Number
186071	Cover 4
186154	Terminal 9
186155	Terminal 9
186156	Cable Assembly 13
186253	Lever w/Hub 2,14
186314	Spring 2,8,10
186339	Spring 8
186343	Codebar 7,8,9
186346	Shield, Magnetic 11
186349	Bracket 11
186406	Lever, Reset 11
186408	Modification Kit 11
186417	Wire, Contact 8
186419	Lever 8
186435	Spring 2
186436	Spring 10
186437	Spring 7,8,9
186558	Shaft w/Link 10
186561	Link w/Hub 10
186564	Lever 10
186565	Lever, Reset 10
186566	Screw, 4-40 Adjusting 10
186568	Pin 10
186569	Bracket 10
186579	Solenoid 10
186700	Shaft 3
186701	Plate 3
186702	Screw, 6-32 Spl 3
186703	Plate, Top Mounting 3
186704	Stud 3
186705	Shaft 3
186706	Cam, Trip 3
186707	Lever 3
186709	Bushing, Eccentric 3
186746	Lever 6
186752	Modification Kit 1,3,14
186754	Bushing 3
186773	Lever, Reset 10
186830	Bracket 3
186831	Solenoid 3
186832	Bushing, Eccentric 3
186833	Shaft 3
186834	Lever 3
186874	Cam, Trip 3
187008	Wire, Contact 8
187009	Cable Assembly 13
192191	Knob 12
192538	Plug, Button 4
195307	Keylever, Repeat 6
195309	Lever, Non-Repeat 7
195312	Lever, Reset 10
195315	Solenoid w/Plunger 10
195317	Pin 10
195321	Bracket, Switch 10
195322	Switch 10
195332	Bracket, Power Switch 12
195333	Switch, Pushbutton 12
195465	Plate, Mounting 10
195470	Insulator, .031" Thk 10
195471	Wire, Contact 10
195472	Terminal 10
195473	Terminal, Common 10
195474**	Panel, Top 12
195475	Cover, Keyboard 4,12
195481**	Cover 12
195482	Cable Assembly 13
195483	Plate 10,12
195563	Lens, Red Pushbutton 12
195568	Lamp, 6 V 12
195614	Pin, Key 13
195965	Tray, Copyholder 12
198670	Screw w/Lockwasher, 6-40 x 5/16 Hex 12
303037	Spring, Compression 3
305537	Plug, Button 4
305706	Shaft w/Link 10
305707	Arm, Reset 10
305708	Bracket, Solenoid 10
311516	Post 12
312918	Strap 10
320410	Terminal, Spade Type 7, 13
320418	Terminal, Ring Type 13
321895	Post 3,14
333588	Lamp, 28V Miniature 12

**Refer to page 1 for finish suffix

33 TYPING UNIT (UP)

PARTS

FIGURE	CONTENTS	PAGE
1	Platen Mechanism – Friction Feed	2
2	Paper Handling Mechanism – Friction Feed	3
3	Platen Mechanism – Sprocket Feed	4
4	Platen Mechanism – Sprocket Feed (Continued)	5
5	Ribbon Feed Mechanism	6
6	Carriage Upper Plate Mechanism	7
7	Carriage Lower Plate Mechanism	8
8	Carriage Power Bail Mechanism	9
9	Carriage Drive Bail Mechanism	10
10	Main Shaft Mechanism – Friction Feed	11
11	Main Shaft Mechanism – Sprocket Feed	12
12	182015 Clutch Trip Lever Assembly	13
13	Codebar Basket Mechanism	14
14	Function Box Mechanism	15
15	Function Shaft Mechanism	16
16	Selector Frame Mechanism	17
17	Clutch and Camsleeve Mechanism	18
18	Distributor Clutch Mechanism	19
19	Trip Shaft Mechanism	20
20	182964 Drive Arm Assembly	21
21	Clutch Trip Mechanism	21
22	Answer-Back Drum Mechanism	22
23	Answer-Back Trip Magnet Mechanism	22
24	Line Feed Function Lever Mechanism	23
25	Function Levers	24
26	Function Levers (Continued)	25
27	185971 Modification Kit to Provide Printer With an End-of-Line Bell to Ring on Approximately the 62nd Character	26
28	185791 Modification Kit to Provide Controlled Single or Double Line Feed Feature on Friction Feed Printer	26
29	Typewheel Chart	27
30	Typewheel Chart (Continued)	28
31	Typewheel Chart (Continued)	29
32	Typewheel Chart (Continued)	30
33	Mechanism – Sprocket Feed	31
34	Later Design Formout Mechanism – Sprocket Feed	32
35	Contact – Sprocket Feed	32
36	Solenoid Print-Nonprint Reset Mechansim	33
37	Base	34
38	Sub Bases	35
39	Motors	36
40	333521 Motor Assembly	37
41	333521 Motor Assembly (Continued)	38
42	Electrical Components	39
43	Cable Components	40
	Numerical Index	41

© 1962 and 1967 by Teletype Corporation
All rights reserved
Printed in U.S.A.

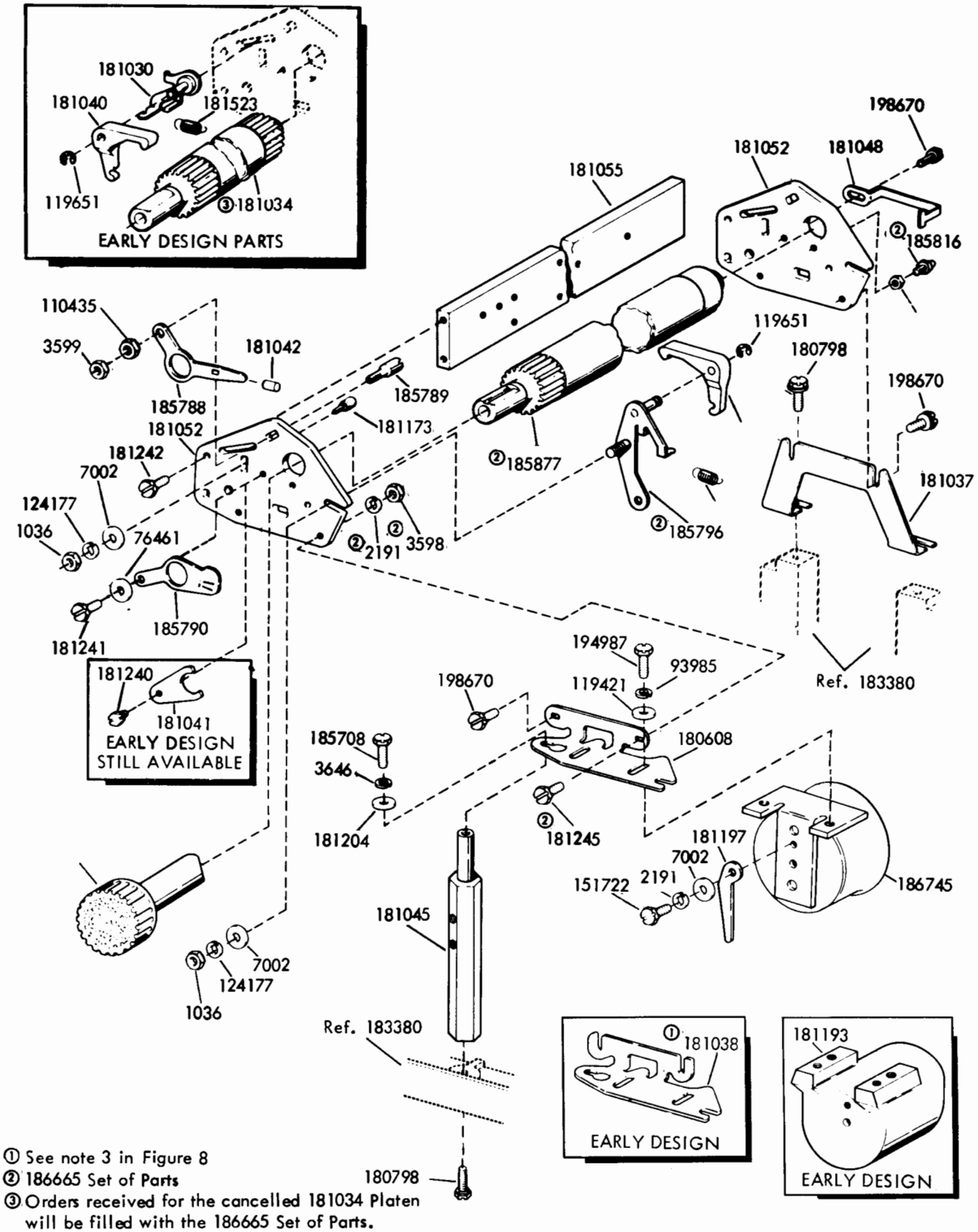

① See note 3 in Figure 8
② 186665 Set of Parts
③ Orders received for the cancelled 181034 Platen will be filled with the 186665 Set of Parts.

FIGURE 1. PLATEN MECHANISM - FRICTION FEED

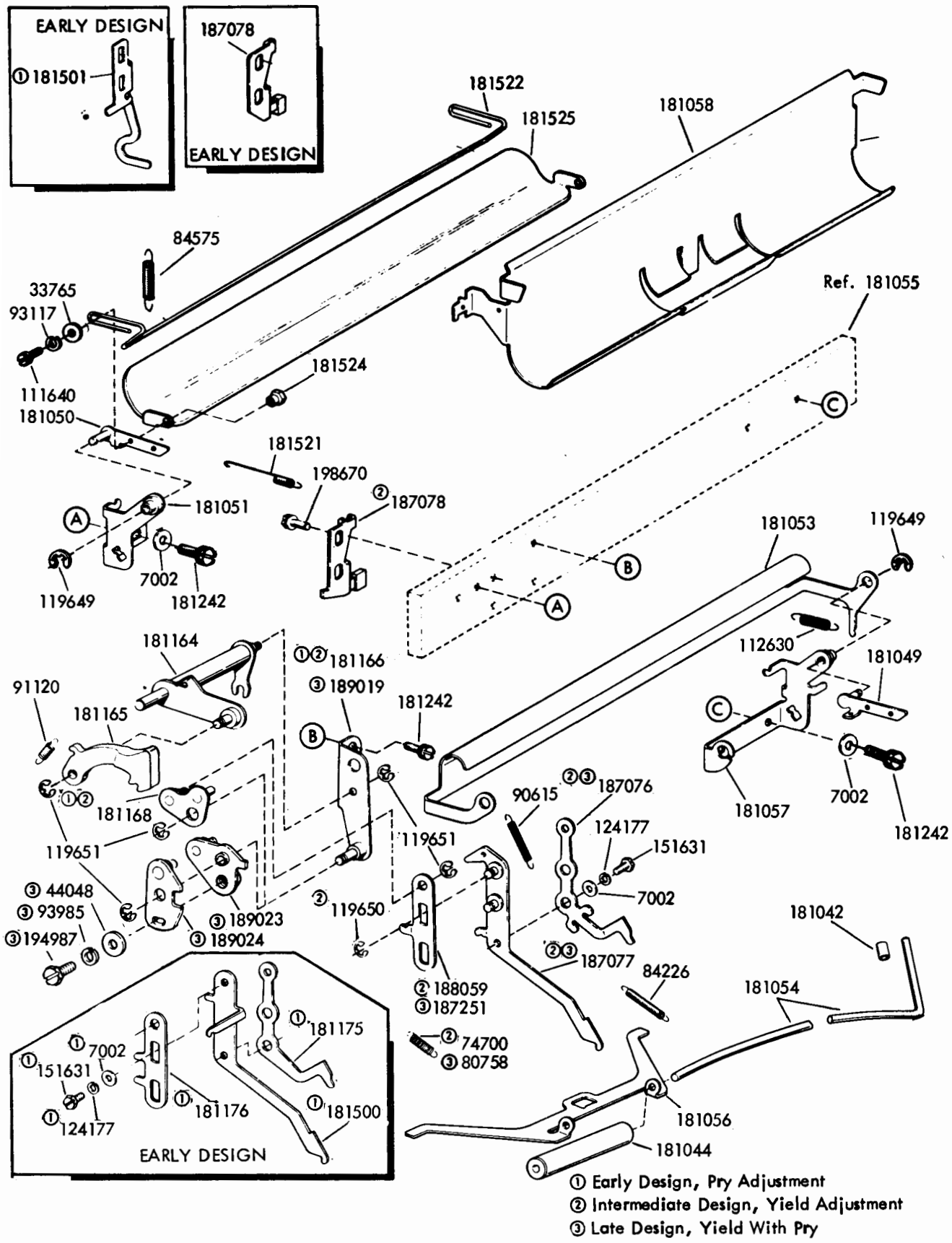

FIGURE 2. PAPER HANDLING MECHANISM - FRICTION FEED

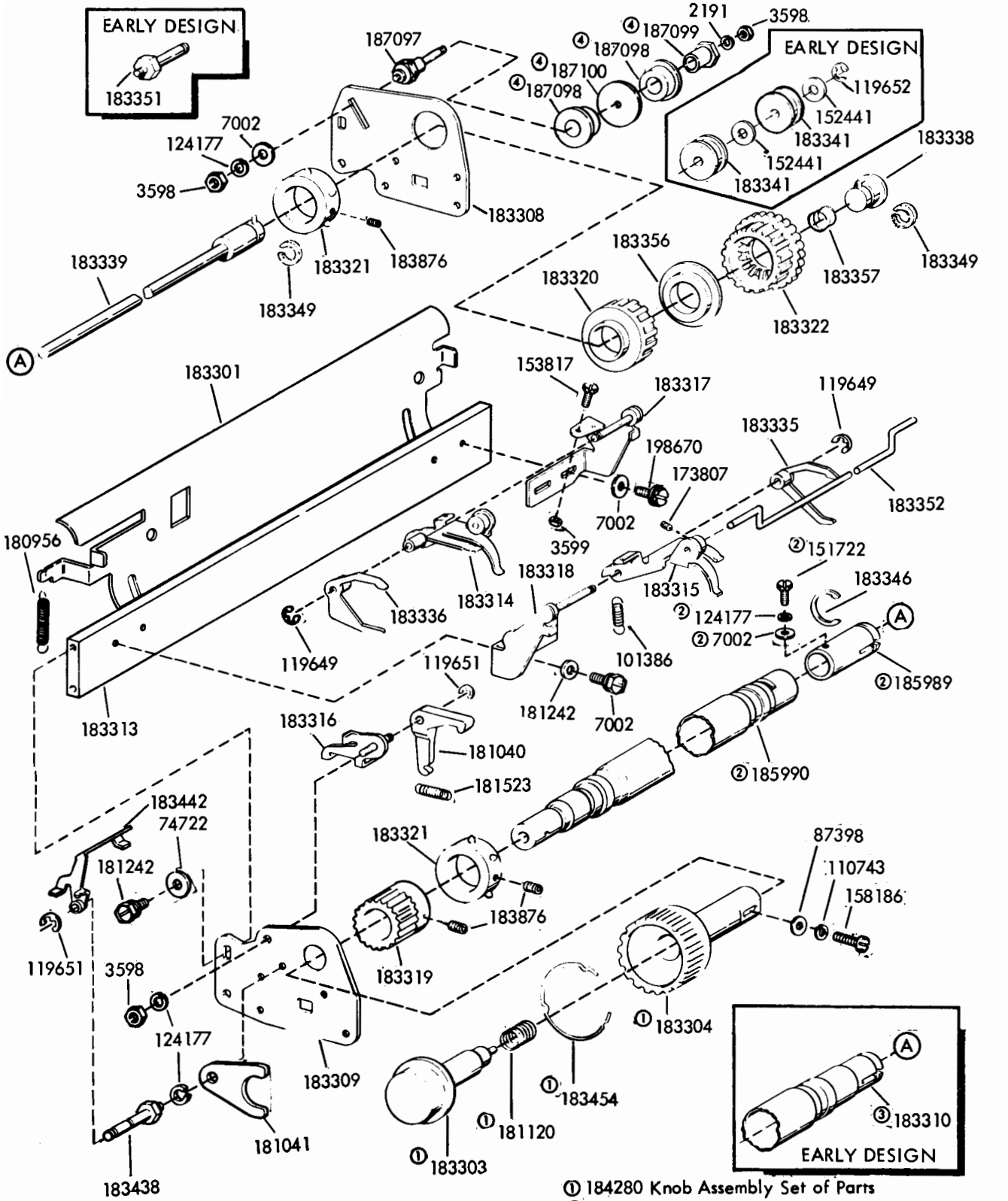

① 184280 Knob Assembly Set of Parts
② 186606 Platen Set of Parts
③ No longer available. Order 186606 Set of Parts
④ Later Design, interchangeable in groups only also includes 187096 Cam Plate, shown on Fig. 33

FIGURE 3. PLATEN MECHANISM - SPROCKET FEED

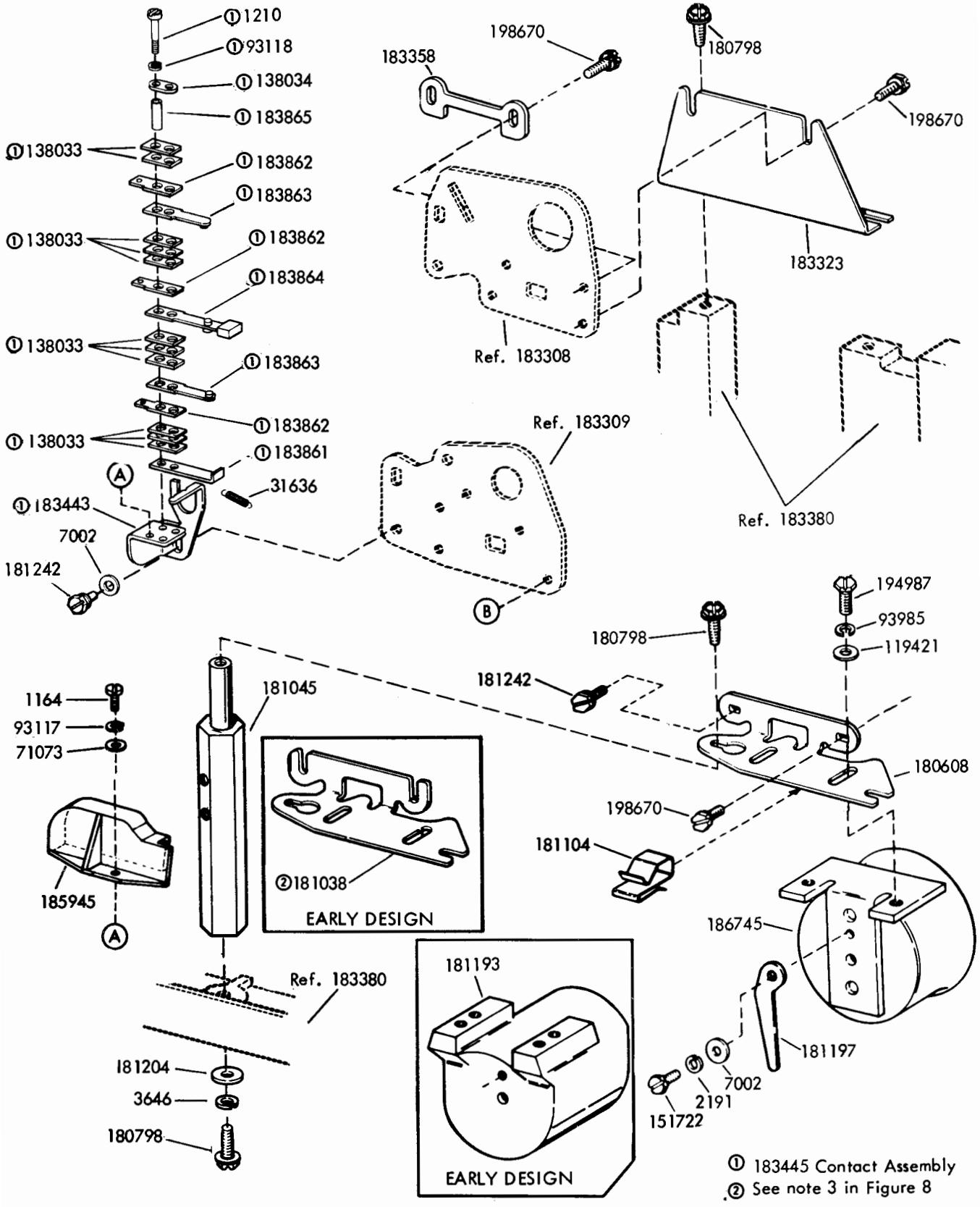

FIGURE 4. PLATEN MECHANISM - SPROCKET FEED (CONTINUED)

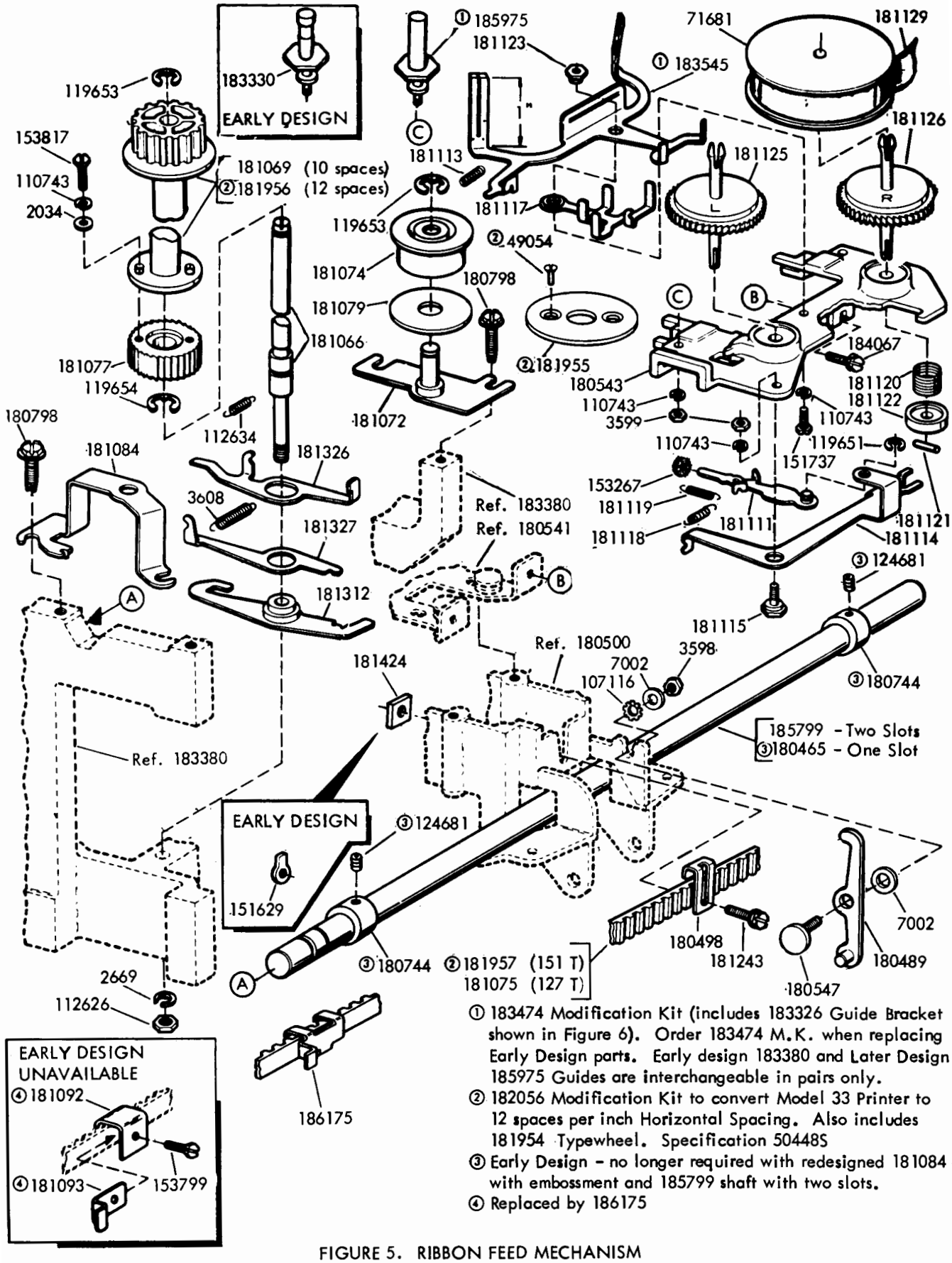

① 183474 Modification Kit (includes 183326 Guide Bracket shown in Figure 6). Order 183474 M.K. when replacing Early Design parts. Early design 183380 and Later Design 185975 Guides are interchangeable in pairs only.

② 182056 Modification Kit to convert Model 33 Printer to 12 spaces per inch Horizontal Spacing. Also includes 181954 Typewheel. Specification 50448S

③ Early Design - no longer required with redesigned 181084 with embossment and 185799 shaft with two slots.

④ Replaced by 186175

FIGURE 5. RIBBON FEED MECHANISM

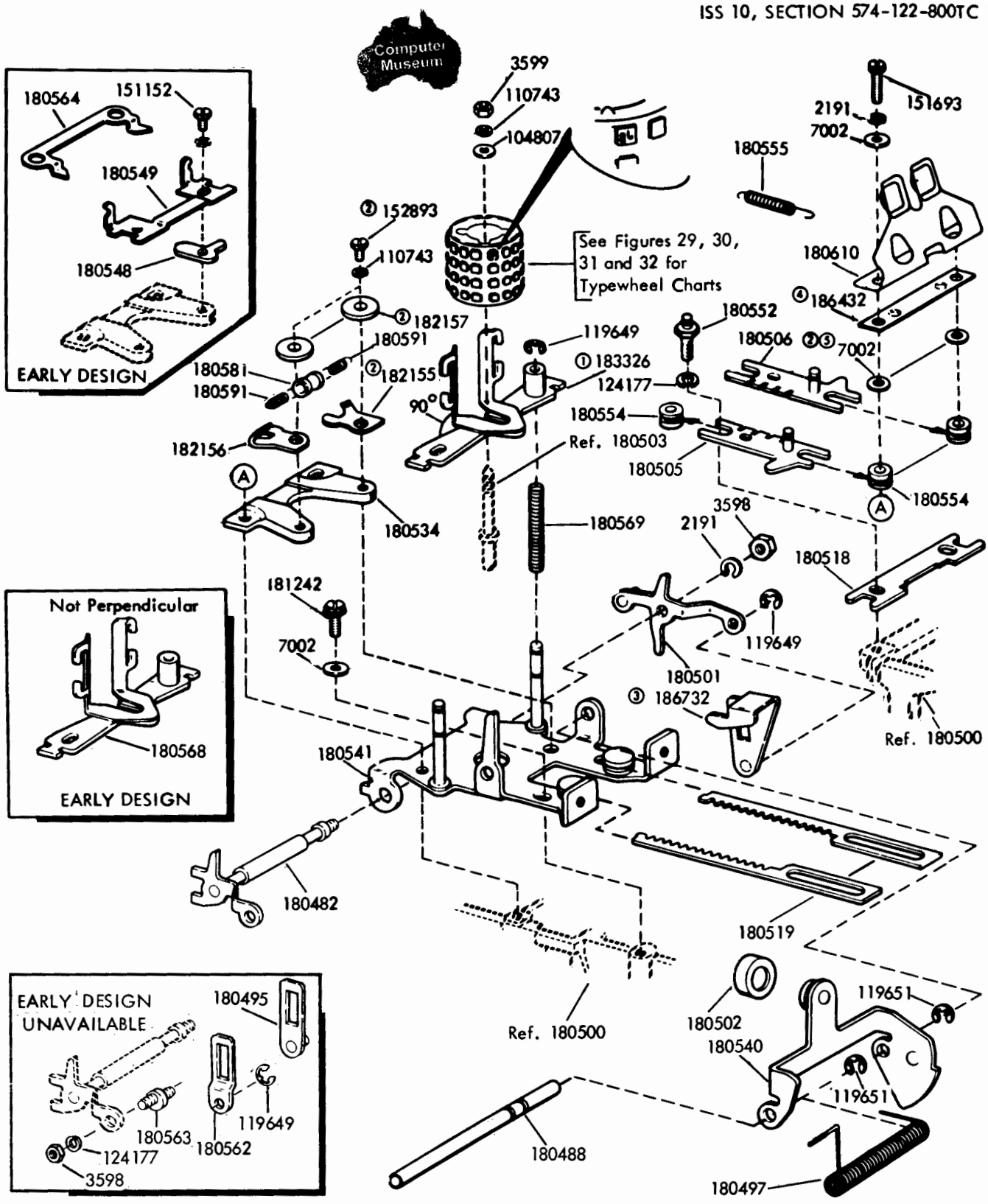

① Part of the 183474 Modification Kit (See note ① in Figure 5)

② Late Design parts - Early Design and Late Design parts are interchangeable as a complete set only.

③ The 186732 Link w/stud replaces the Early Design 180495 and 180562 Links

④ Used on units equipped with the non-adjustable rotary rack.

⑤ Used on units not equipped with the non-adjustable rotary rack.

FIGURE 6. CARRIAGE UPPER PLATE MECHANISM

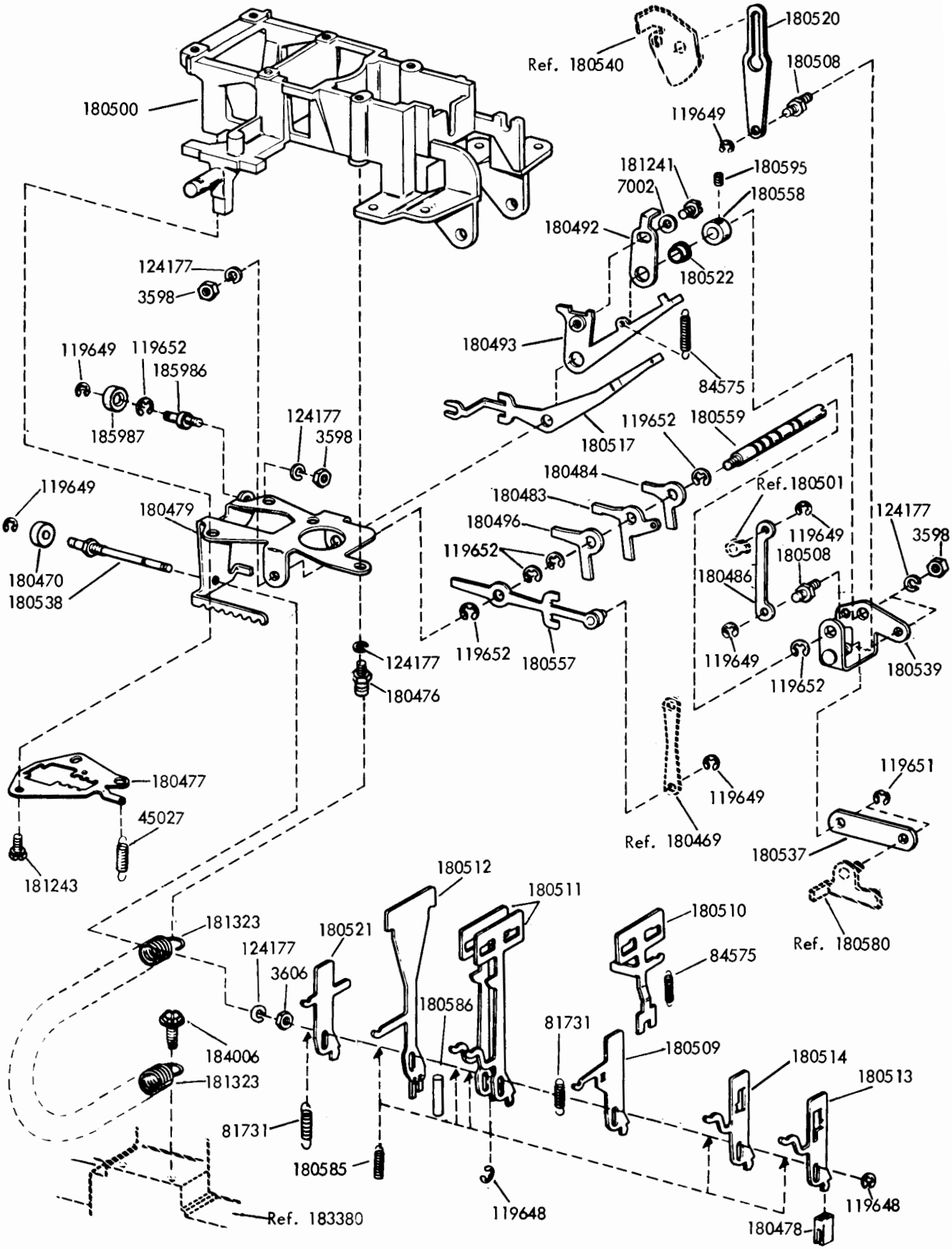

FIGURE 7. CARRIAGE LOWER PLATE MECHANISM

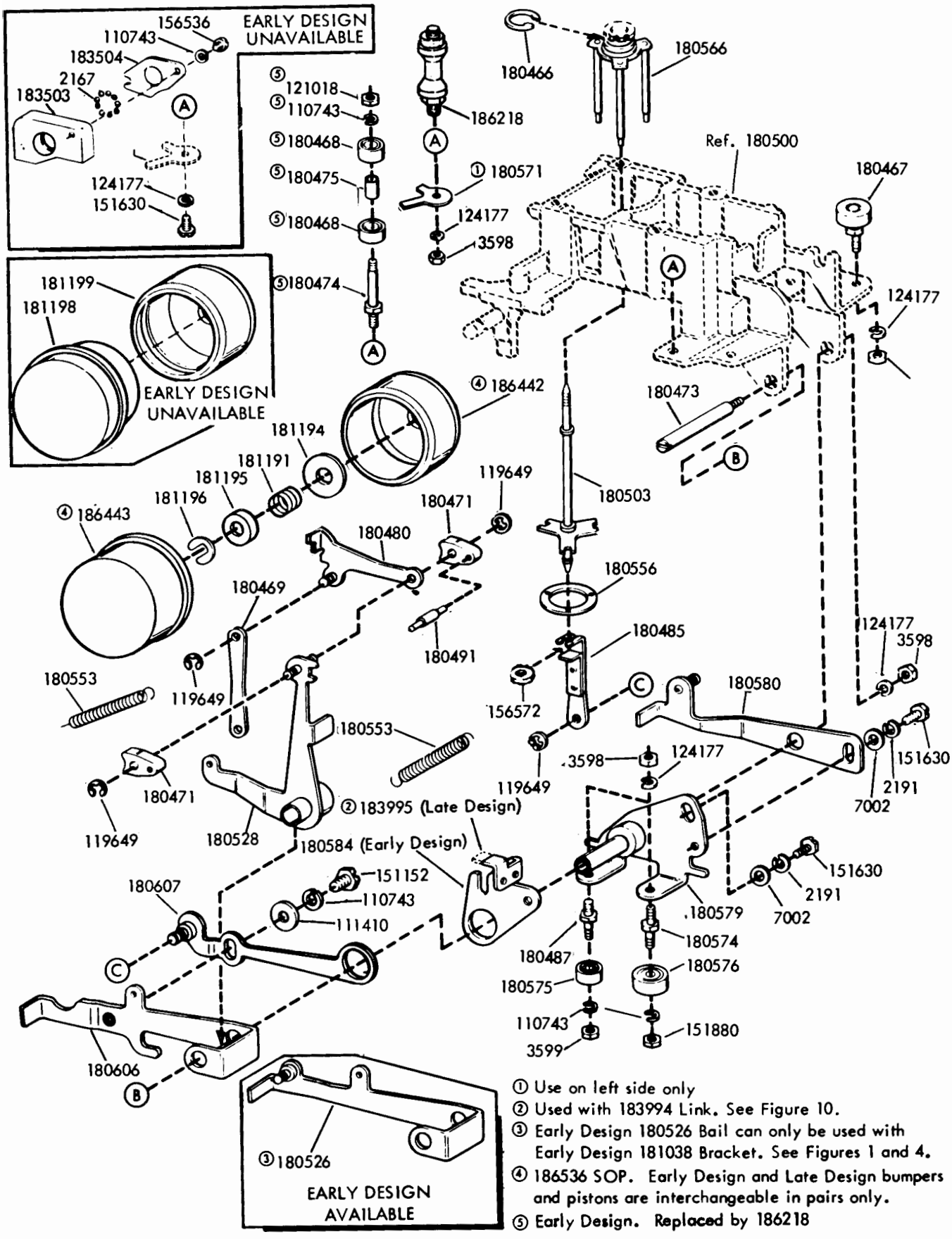

① Use on left side only
② Used with 183994 Link. See Figure 10.
③ Early Design 180526 Bail can only be used with Early Design 181038 Bracket. See Figures 1 and 4.
④ 186536 SOP. Early Design and Late Design bumpers and pistons are interchangeable in pairs only.
⑤ Early Design. Replaced by 186218

FIGURE 8. CARRIAGE POWER BAIL MECHANISM

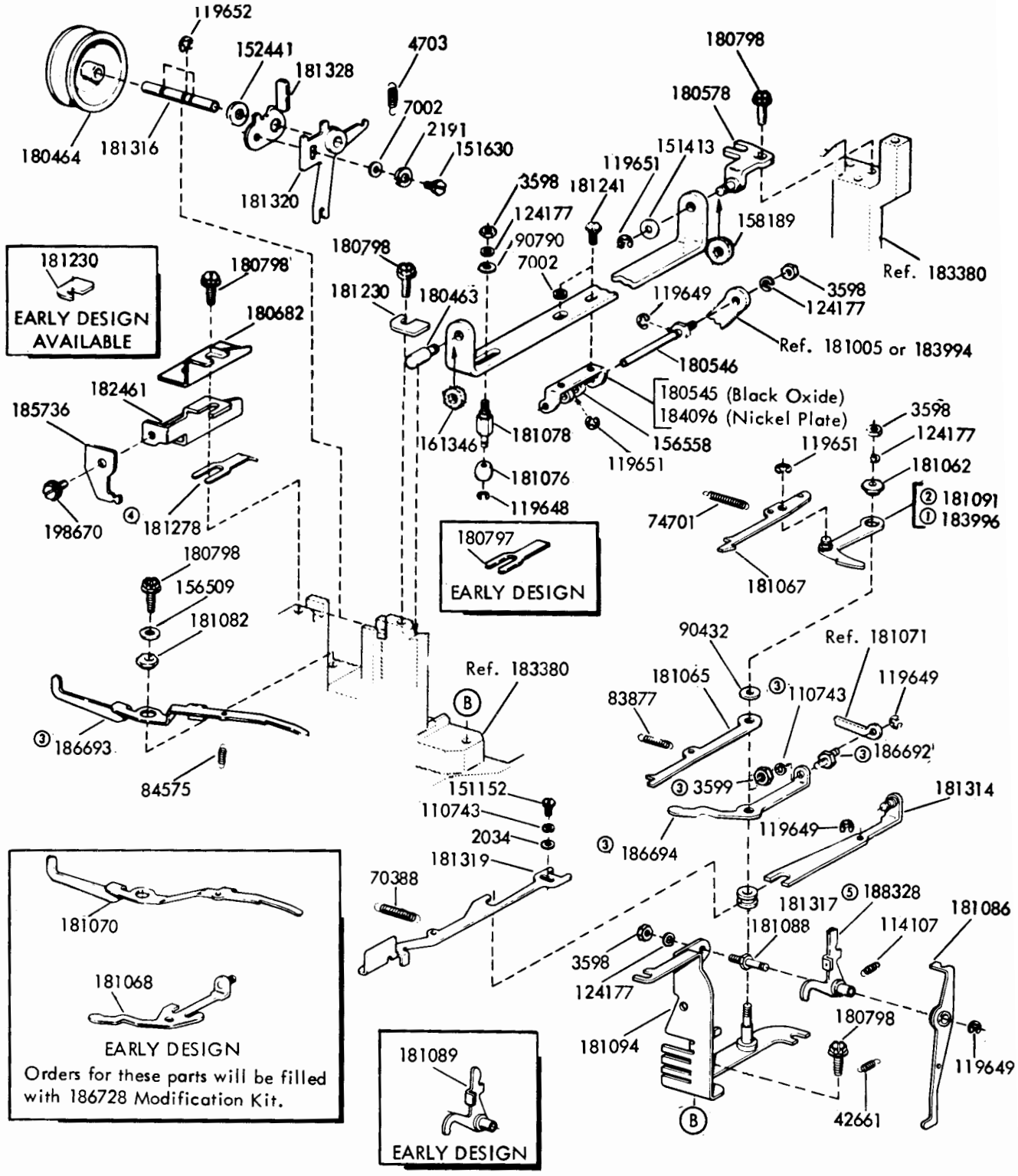

① Used with 183994 (Figure 10)
② Used with 181005 (Figure 10)
③ 186728 Modification Kit
④ 181278 replaces 180797
⑤ 188328 replaces 181089

FIGURE 9. CARRIAGE DRIVE BAIL MECHANISM

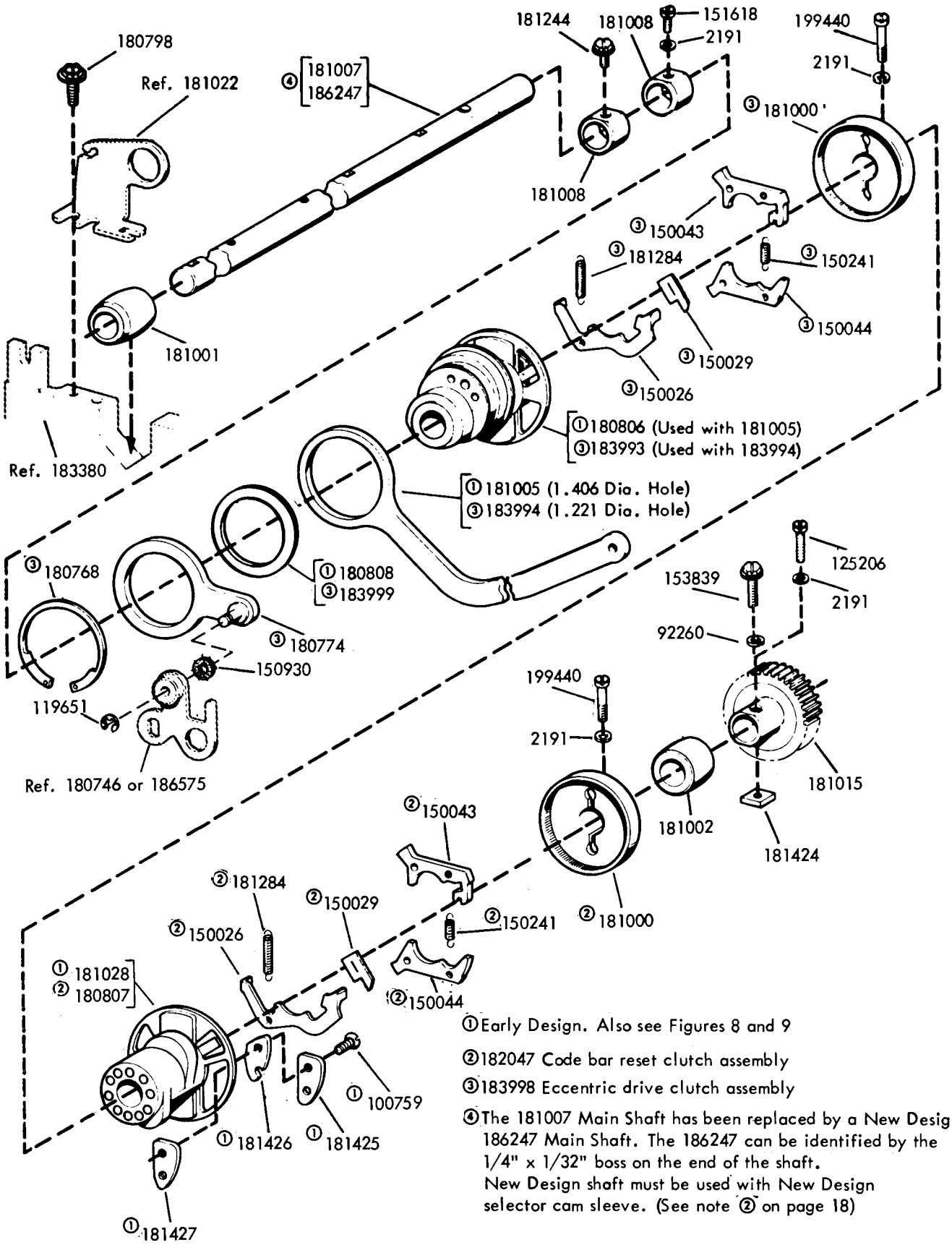

①Early Design. Also see Figures 8 and 9

②182047 Code bar reset clutch assembly

③183998 Eccentric drive clutch assembly

④The 181007 Main Shaft has been replaced by a New Design 186247 Main Shaft. The 186247 can be identified by the 1/4" x 1/32" boss on the end of the shaft. New Design shaft must be used with New Design selector cam sleeve. (See note ② on page 18)

FIGURE 10. MAIN SHAFT MECHANISM - FRICTION FEED

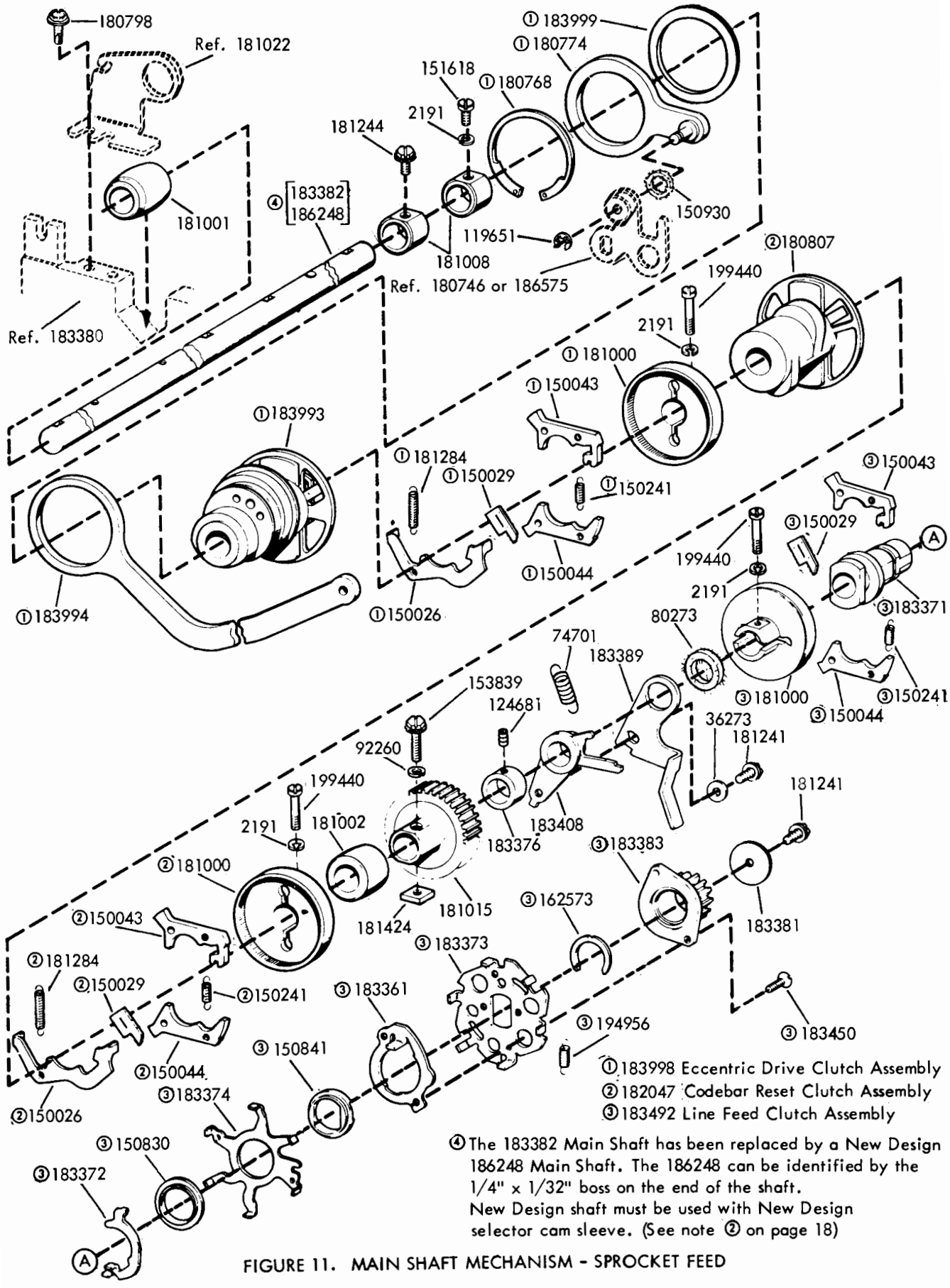

①183998 Eccentric Drive Clutch Assembly
②182047 Codebar Reset Clutch Assembly
③183492 Line Feed Clutch Assembly

④The 183382 Main Shaft has been replaced by a New Design 186248 Main Shaft. The 186248 can be identified by the 1/4" x 1/32" boss on the end of the shaft.
New Design shaft must be used with New Design selector cam sleeve. (See note ② on page 18)

FIGURE 11. MAIN SHAFT MECHANISM - SPROCKET FEED

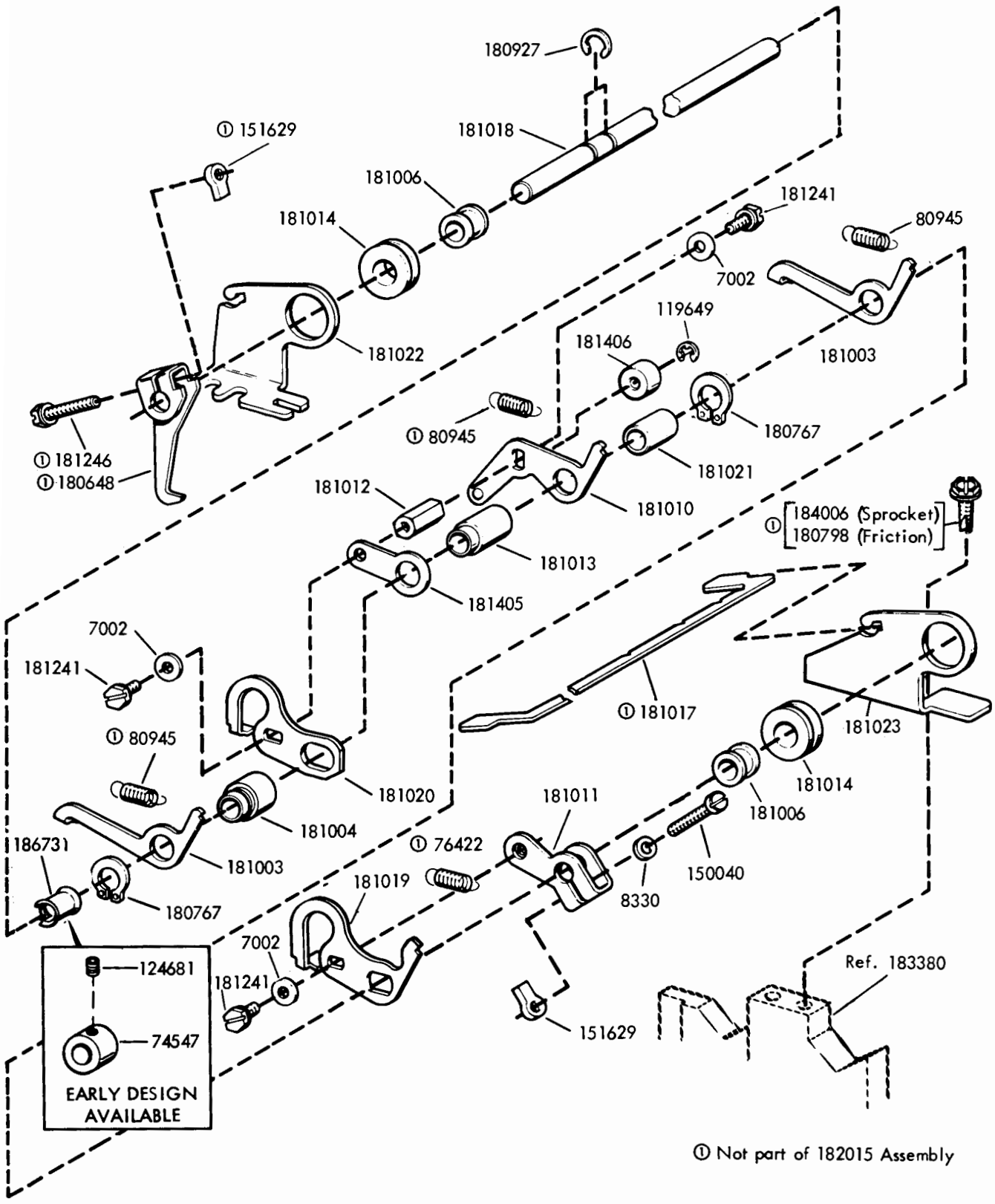

FIGURE 12. 182015 CLUTCH TRIP LEVER ASSEMBLY

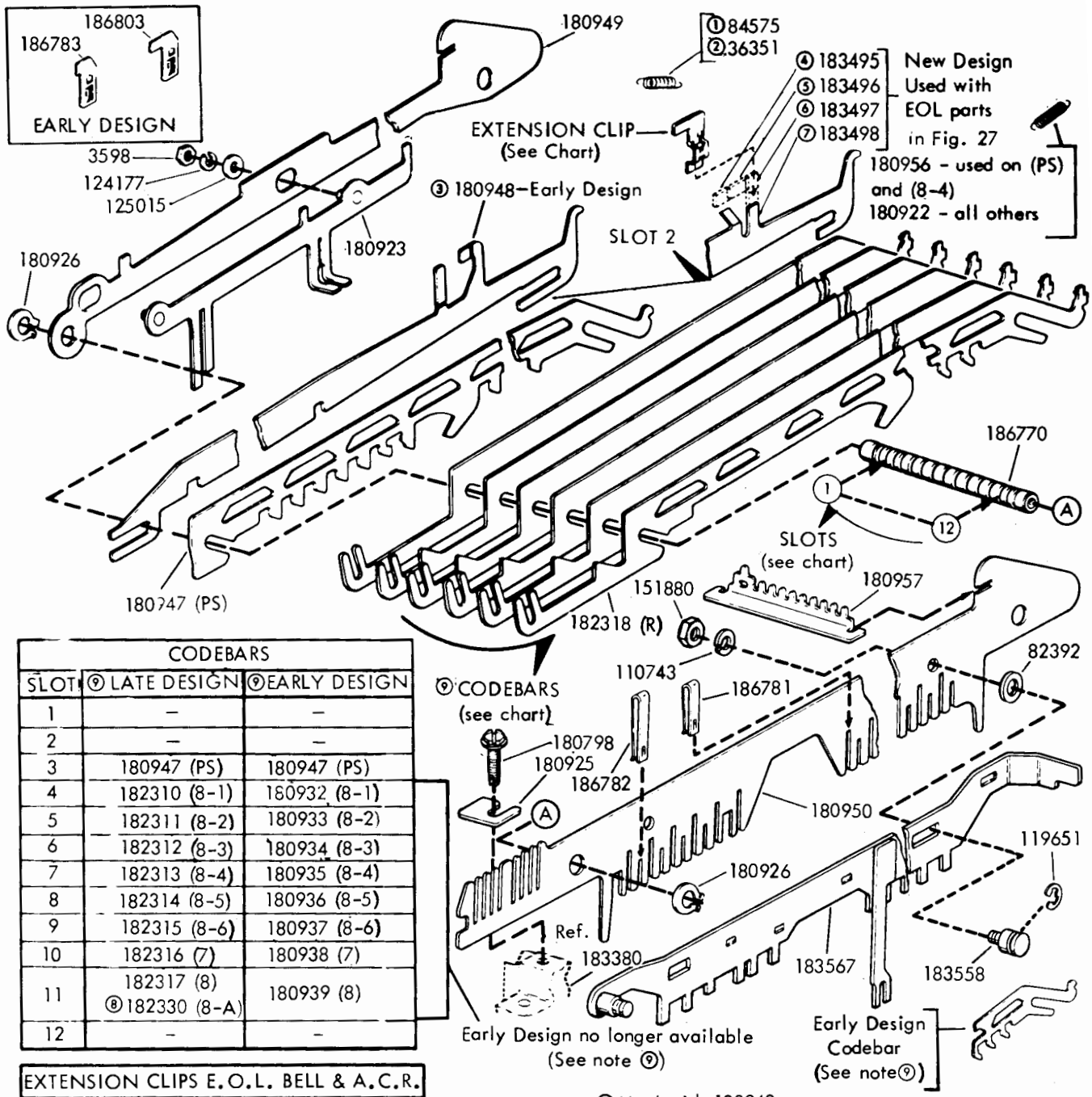

CODEBARS		
SLOT	⑨ LATE DESIGN	⑨EARLY DESIGN
1	–	–
2	–	–
3	180947 (PS)	180947 (PS)
4	182310 (8-1)	180932 (8-1)
5	182311 (8-2)	180933 (8-2)
6	182312 (8-3)	180934 (8-3)
7	182313 (8-4)	180935 (8-4)
8	182314 (8-5)	180936 (8-5)
9	182315 (8-6)	180937 (8-6)
10	182316 (7)	180938 (7)
11	182317 (8) ⑧182330 (8-A)	180939 (8)
12	–	–

EXTENSION CLIPS E.O.L. BELL & A.C.R.		
PART NUMBER	I.D. STAMP	USAGE
186783	F-72	FRICTION 10"
186803	S-72	SPROCKET 10"
187196	F-69	FRICTION 10"
187197	F-74	FRICTION 10"
187198	S-69	SPROCKET 10"
187199	F-83	FRICTION 12"
187200	F-86	FRICTION 12"
187201	-	FRICTION 12"
187202	S-83	SPROCKET 12"
187203	S-86	SPROCKET 12"

① Used with 180948
② All others
③ Auto CR and EOL bell. By removing tines bar can be coded for a 69, 72 or 74 character line
④ Auto CR and EOL bell on a 69 character line
⑤ Auto CR and EOL bell on a 72 character line
⑥ Auto CR and EOL bell on a 74 character line
⑦ EOL bell only.
⑧ Sets equipped with even parity keyboard
⑨ Early Design (Black Oxide) and Late Design (Nickel) Codebars are interchangeable in sets only. (Numbers in parenthesis indicate stamping on bar) See notes④and⑤ in Figure 16

FIGURE 13. CODEBAR BASKET MECHANISM

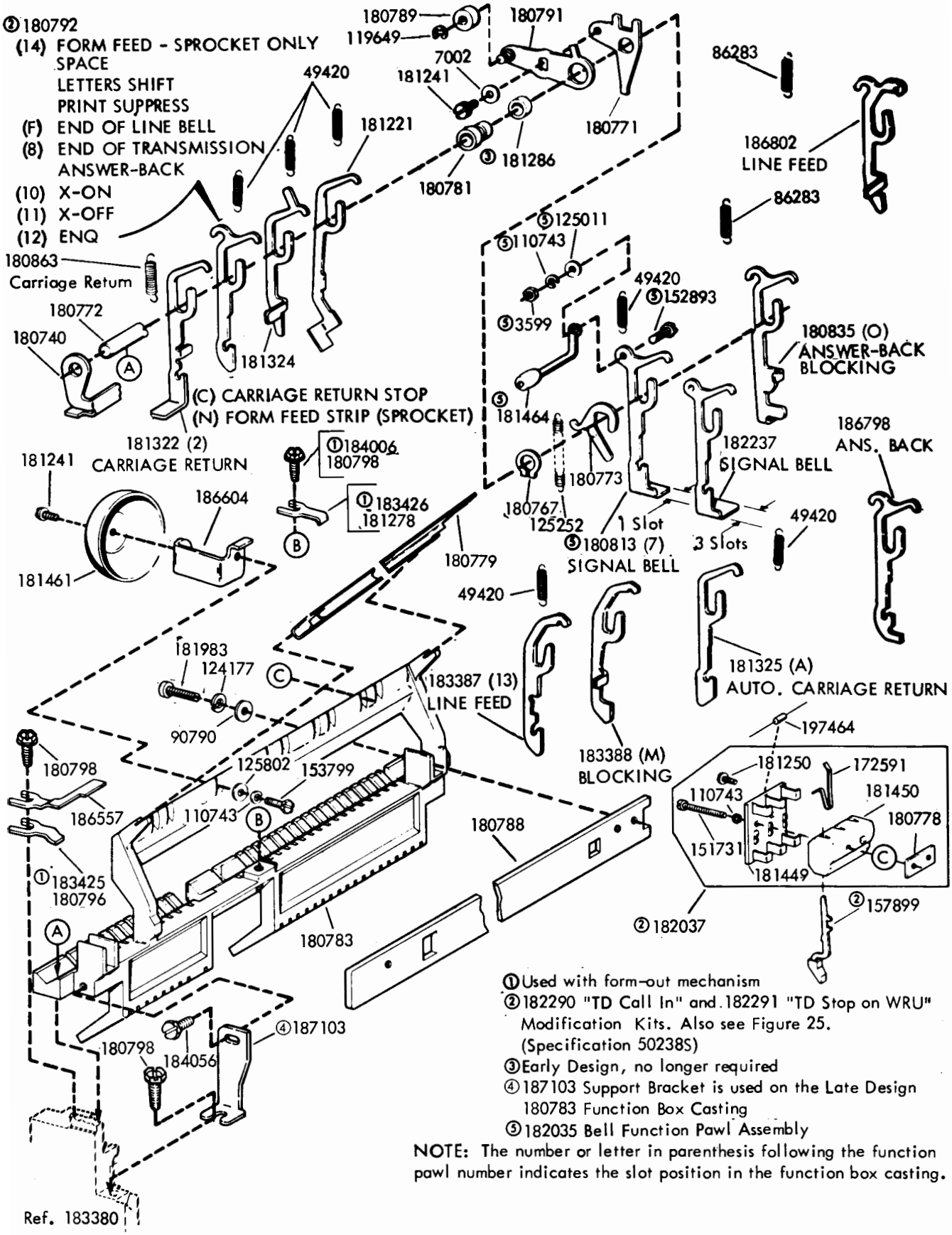

①Used with form-out mechanism
②182290 "TD Call In" and 182291 "TD Stop on WRU" Modification Kits. Also see Figure 25. (Specification 50238S)
③Early Design, no longer required
④187103 Support Bracket is used on the Late Design 180783 Function Box Casting
⑤182035 Bell Function Pawl Assembly

NOTE: The number or letter in parenthesis following the function pawl number indicates the slot position in the function box casting.

FIGURE 14. FUNCTION BOX MECHANISM

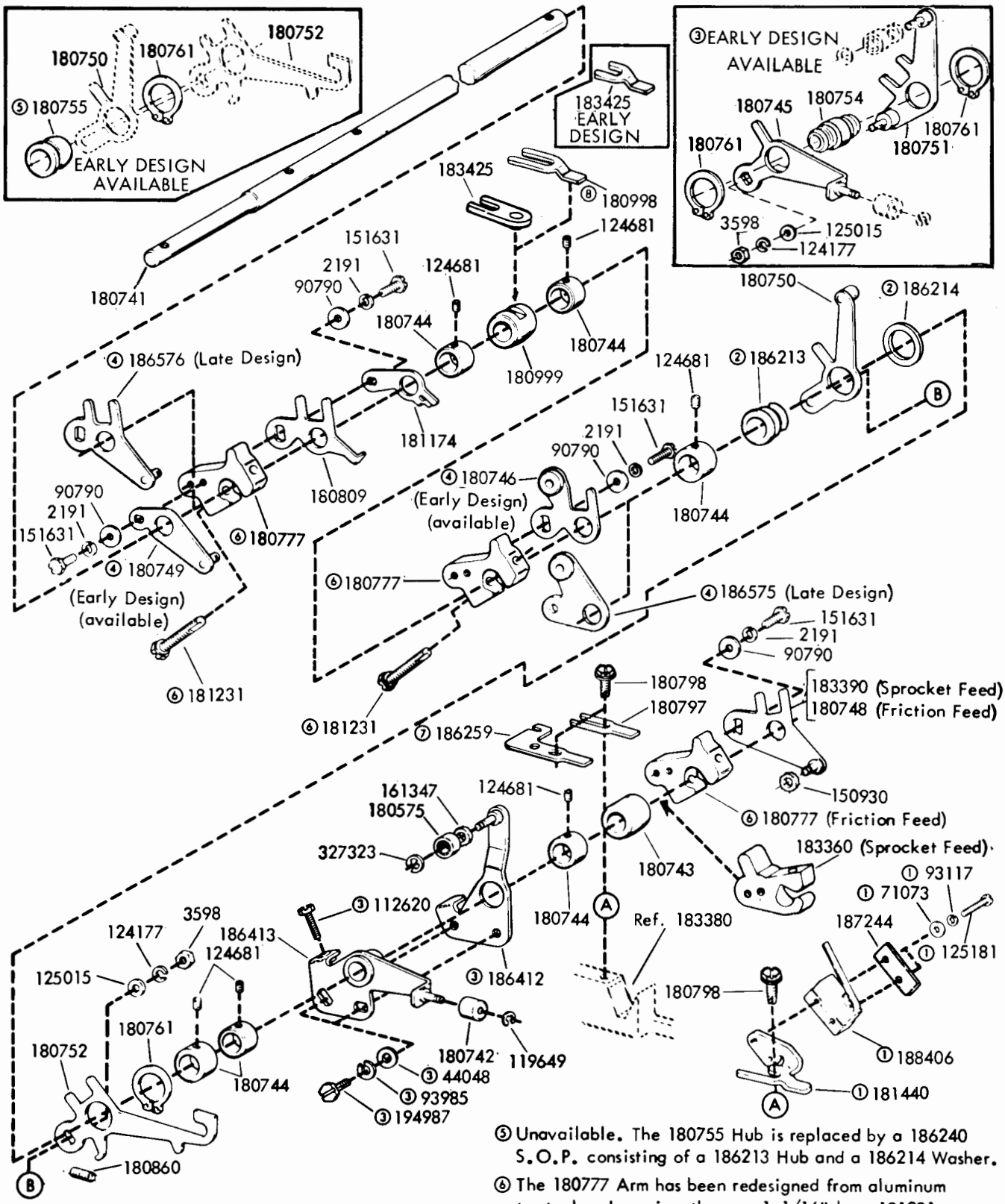

⑤ Unavailable. The 180755 Hub is replaced by a 186240 S.O.P. consisting of a 186213 Hub and a 186214 Washer.

⑥ The 180777 Arm has been redesigned from aluminum to steel and requires the new 1-1/16" long 181231 Screw. The old screw is 1" long.

⑦ Used with Late Design distributor trip linkage parts. See notes ③, ④ and ① in Figures 18, 19 and 37 respectively

⑧ Replaced by Late Design 183425 Clamp

① Peculiar to units having low paper alarm

② 186240 Set of Parts

③ Early and Late Design Parts interchangeable in sets only

④ Early and Late Design Parts interchangeable in pairs only

FIGURE 15. FUNCTION SHAFT MECHANISM

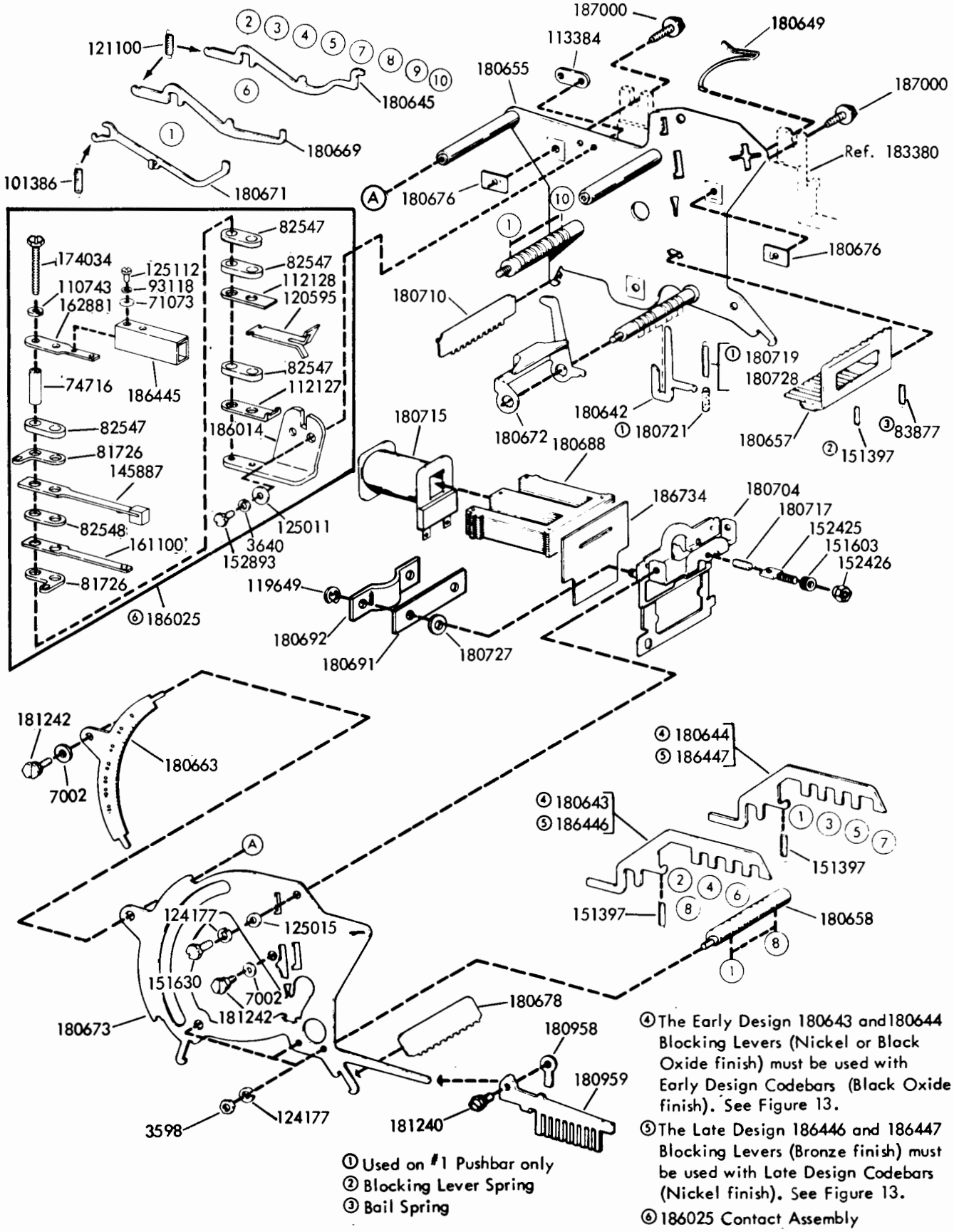

① Used on #1 Pushbar only
② Blocking Lever Spring
③ Bail Spring

④ The Early Design 180643 and 180644 Blocking Levers (Nickel or Black Oxide finish) must be used with Early Design Codebars (Black Oxide finish). See Figure 13.

⑤ The Late Design 186446 and 186447 Blocking Levers (Bronze finish) must be used with Late Design Codebars (Nickel finish). See Figure 13.

⑥ 186025 Contact Assembly

FIGURE 16. SELECTOR FRAME MECHANISM

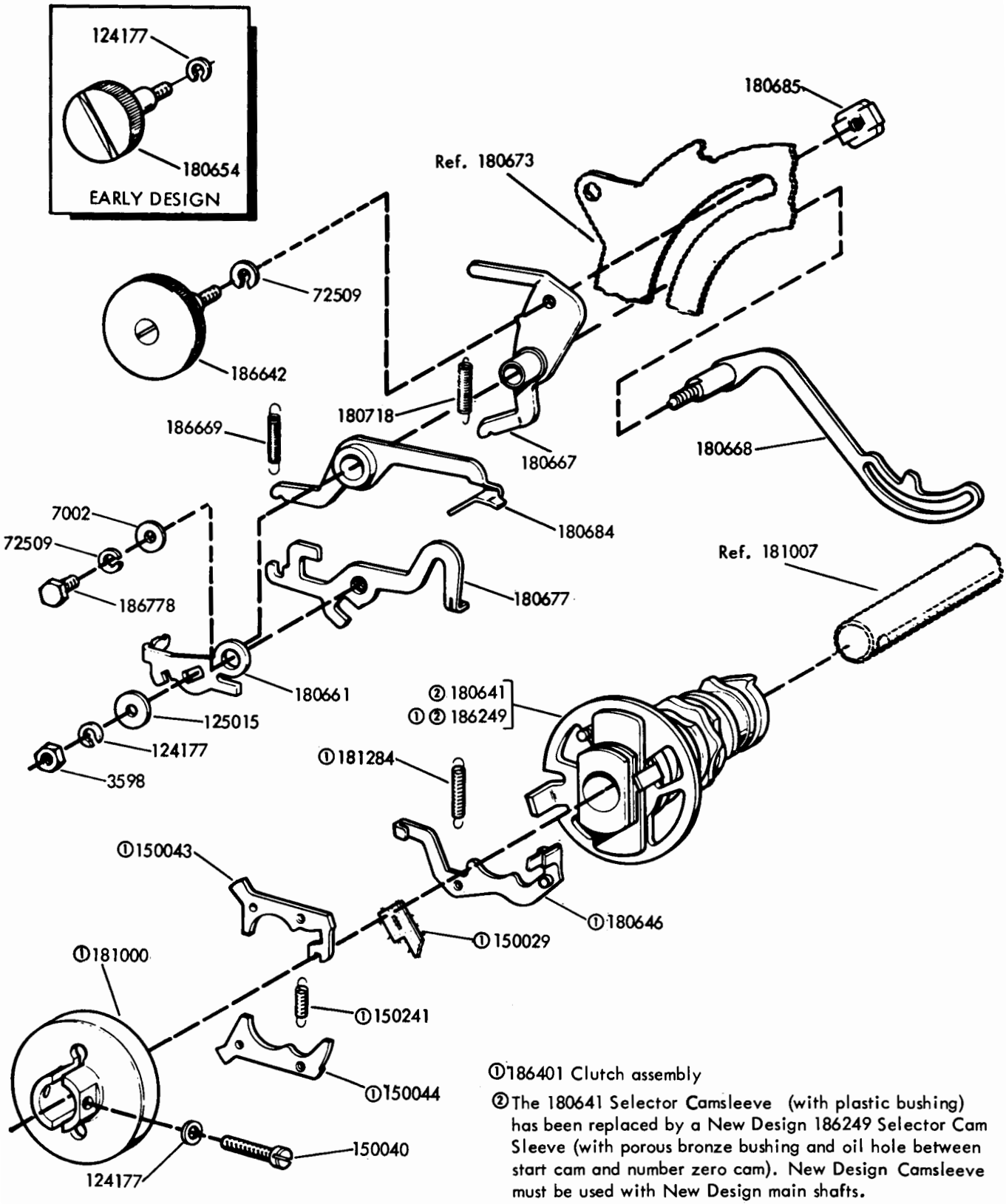

①186401 Clutch assembly

②The 180641 Selector Camsleeve (with plastic bushing) has been replaced by a New Design 186249 Selector Cam Sleeve (with porous bronze bushing and oil hole between start cam and number zero cam). New Design Camsleeve must be used with New Design main shafts.

(See note ④ on pages 11 and 12)

FIGURE 17. CLUTCH AND CAMSLEEVE MECHANISM

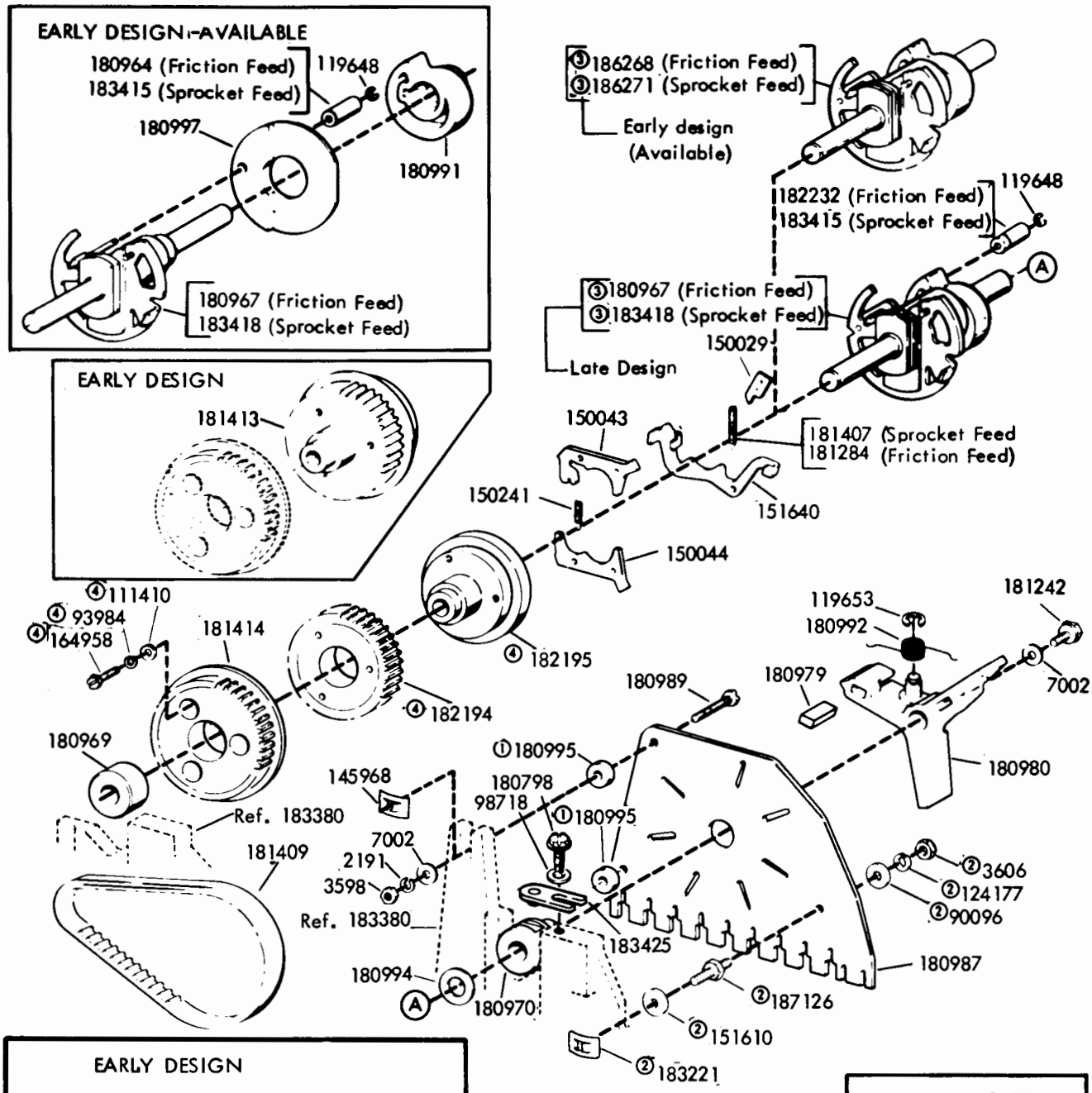

① Not required on units having 180850 Magnet Bracket. (See Figure 21)

② Late Design replaces Early and Intermidiate Design as a group.

③ Late Design and Early Design distributor trip linkage parts are interchangeable in sets only. See notes ⑦, ④ and ① in Figures 15, 19 and 37 respectively.

④ 186042 Set of Parts replaces Cancelled 181413 Clutch Drum.

FIGURE 18. DISTRIBUTOR CLUTCH MECHANISM

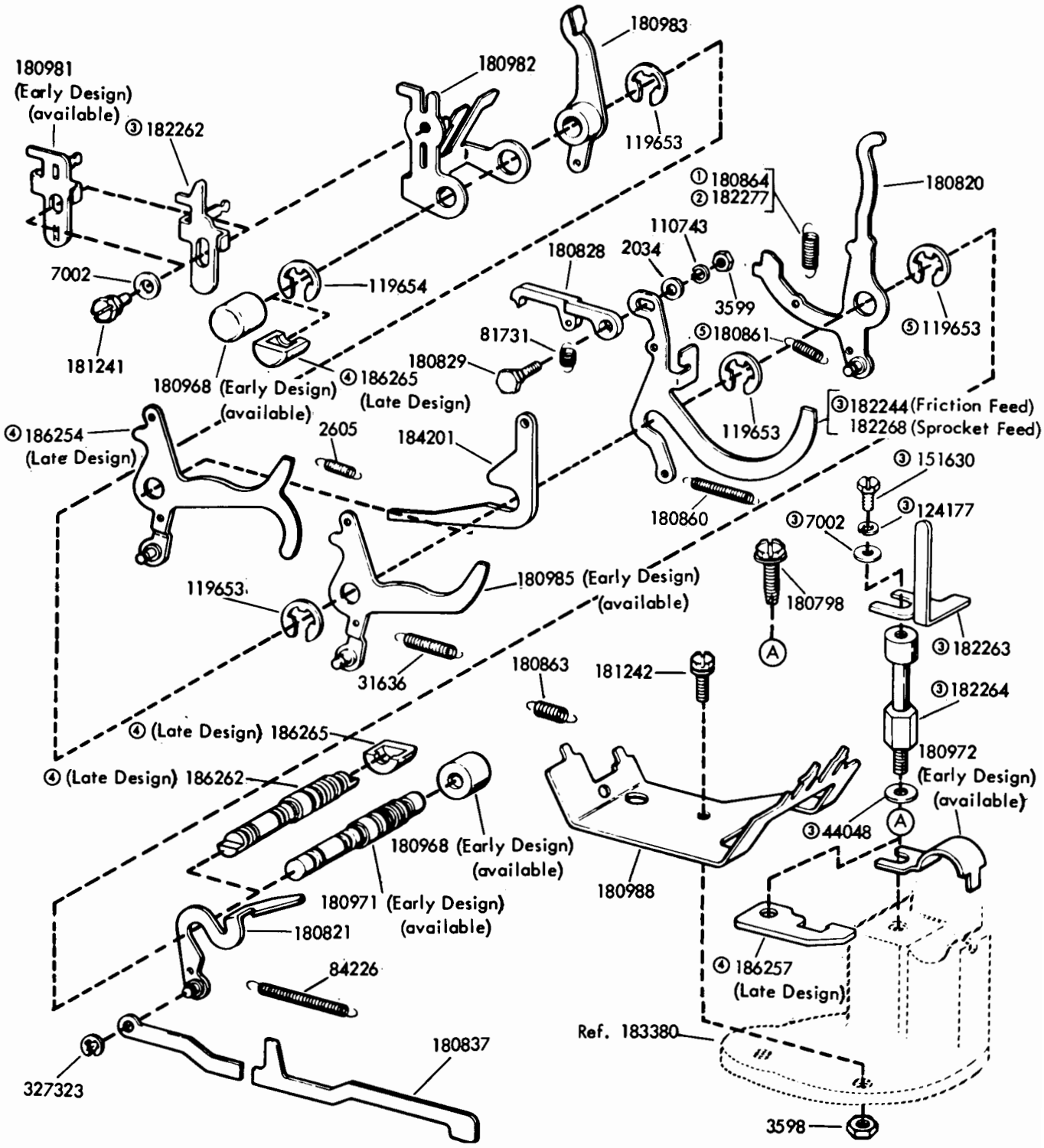

① Used with units employing 180843 trip lever (Figure 23)
② Used with units employing 182276 trip lever (Figure 23)
③ 182269 Modification Kit to prevent double tripping of the Distributor Clutch by the Keyboard, Reader and Answer-Back Mechanism. Also includes the 182239 Latch - Lever and the 186253 Lever used on the Keyboard (Specification 50264S)
④ Early and Late Design distributor trip linkage parts are interchangeable in sets only. See notes ⑦, ③ and ① in Figures 15, 18 and 37 respectively.
⑤ Omitted on units employing 182276 Answer Back Trip Lever. (Figure 23).

FIGURE 19. TRIP SHAFT MECHANISM

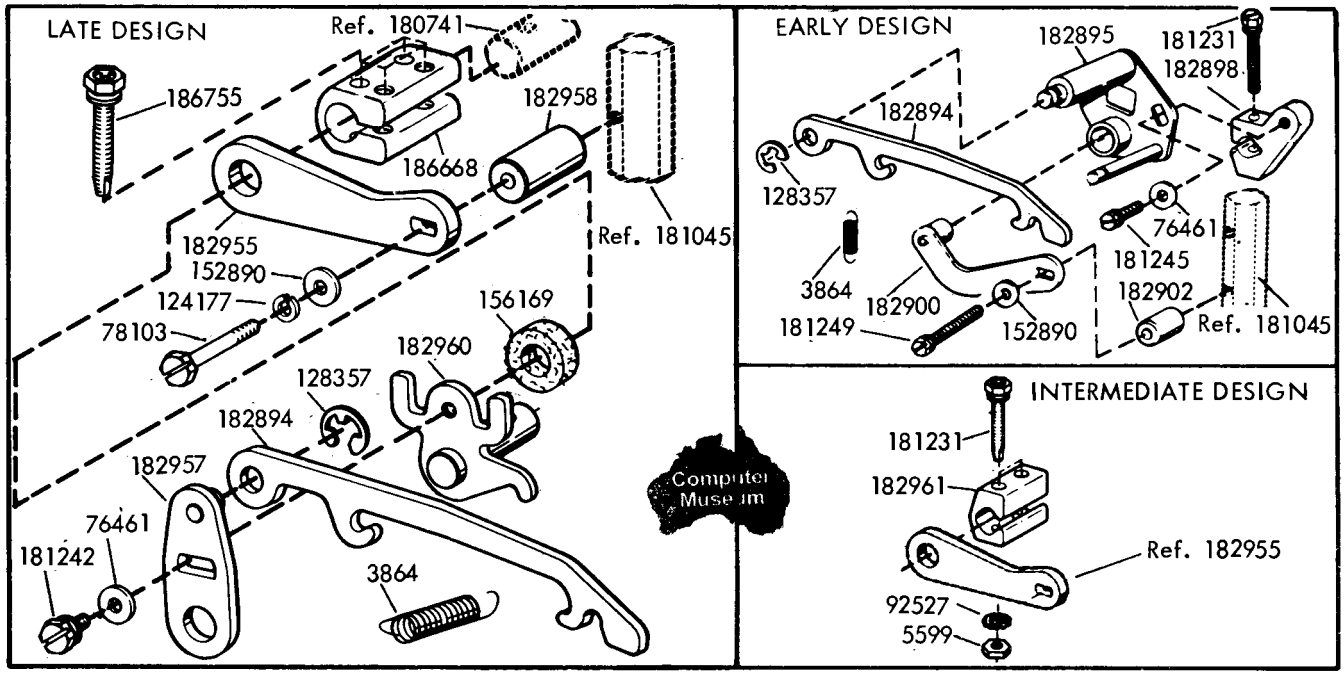

FIGURE 20. 182964 DRIVE ARM ASSEMBLY

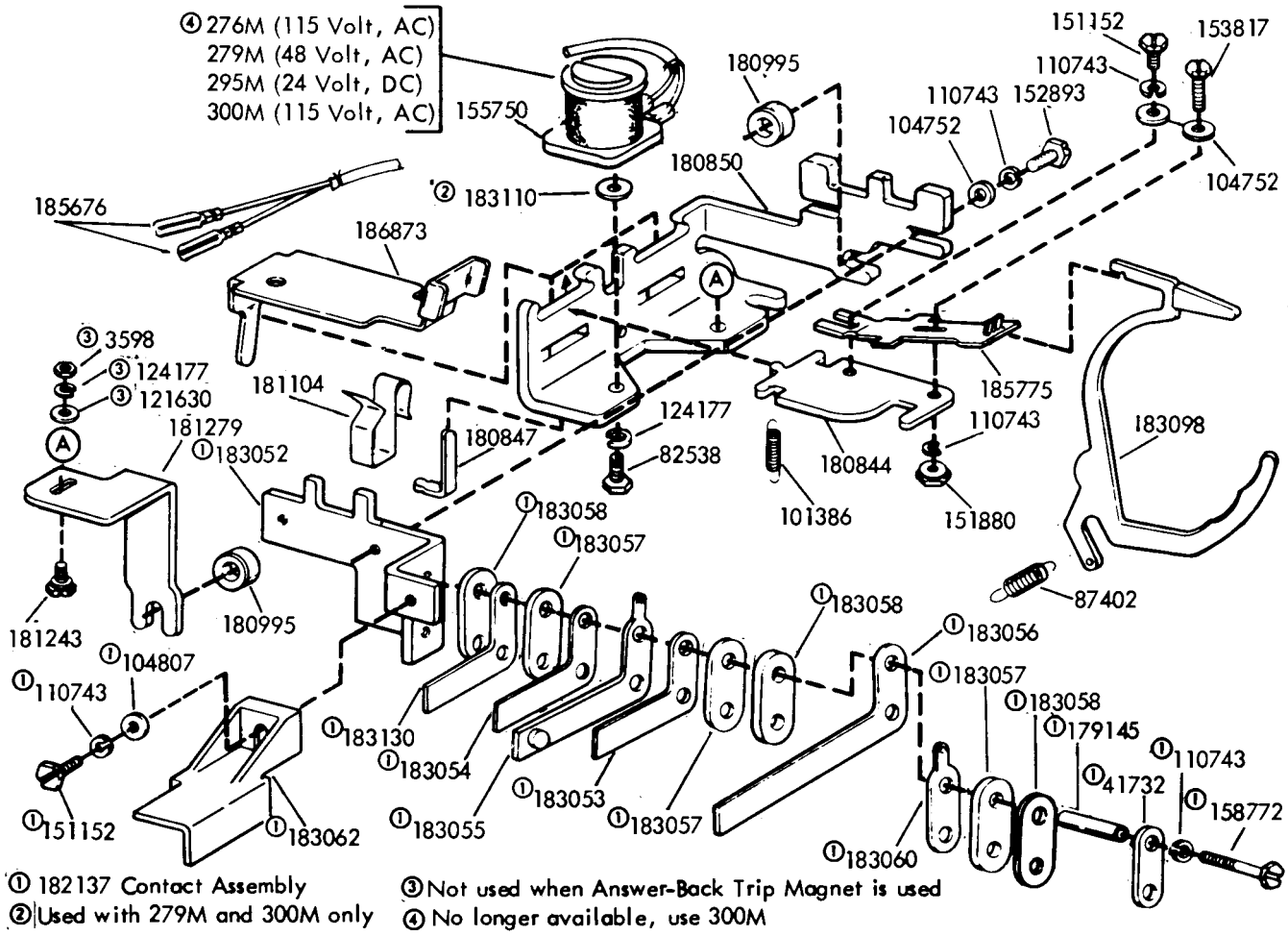

FIGURE 21. CLUTCH TRIP MECAHNISM

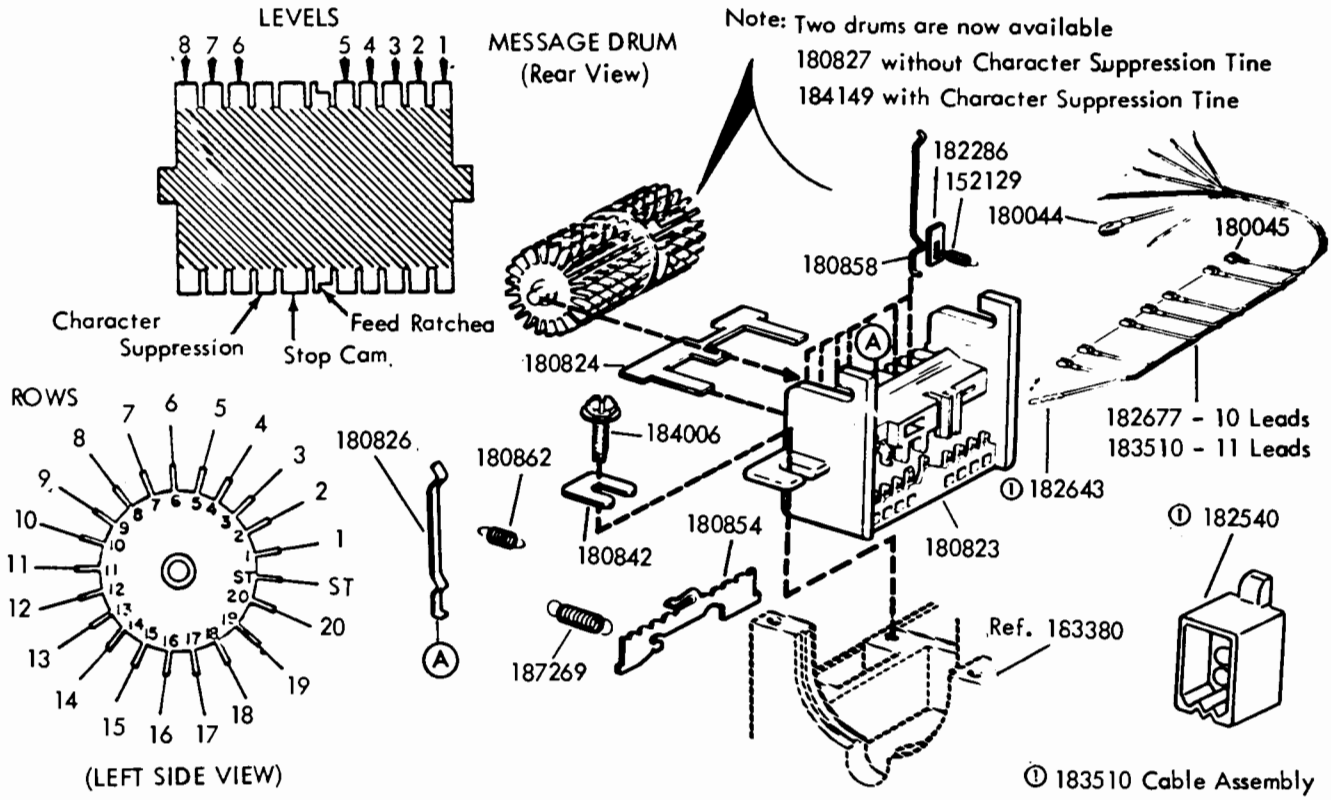

FIGURE 22. ANSWER - BACK DRUM MECHANISM

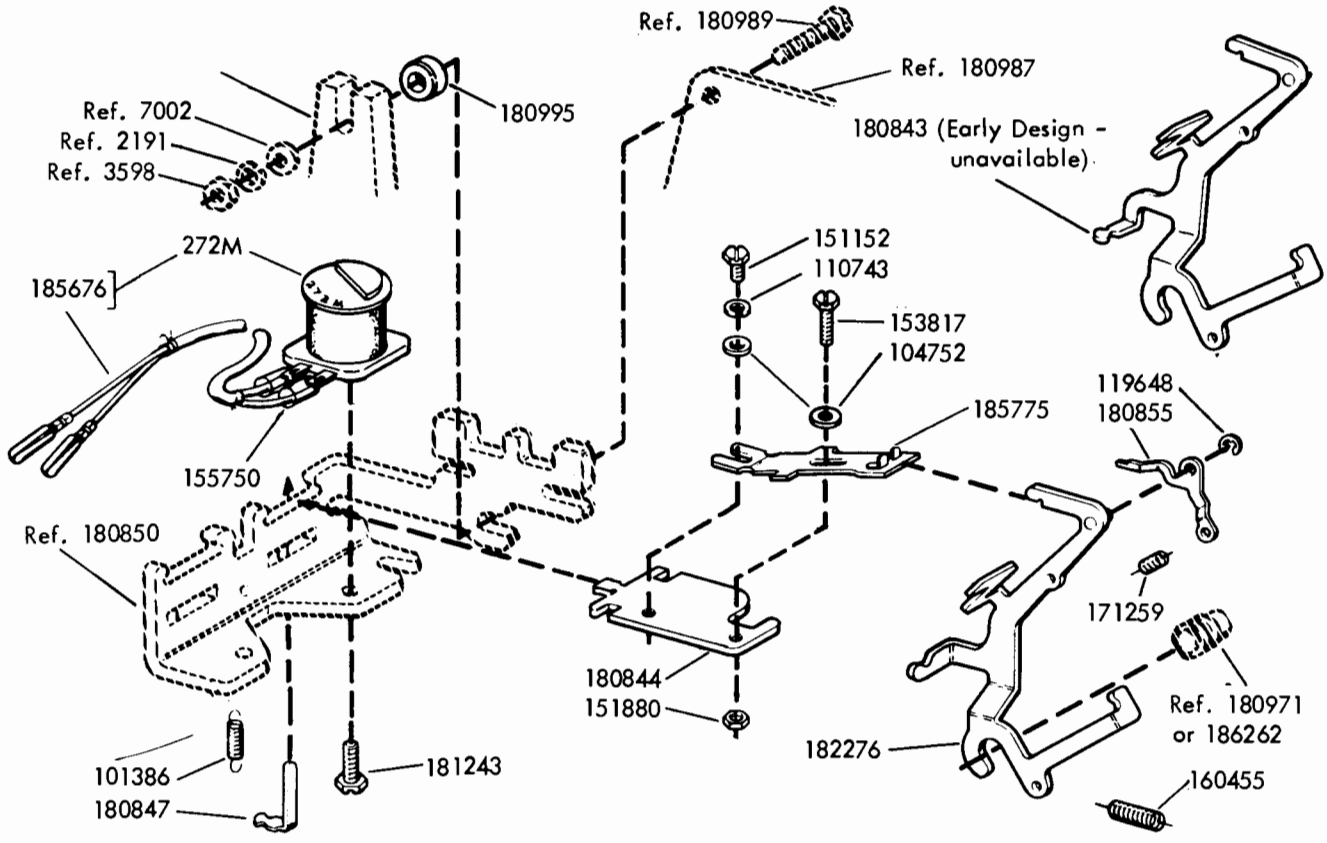

FIGURE 23. ANSWER - BACK TRIP MAGNET MECHANISM

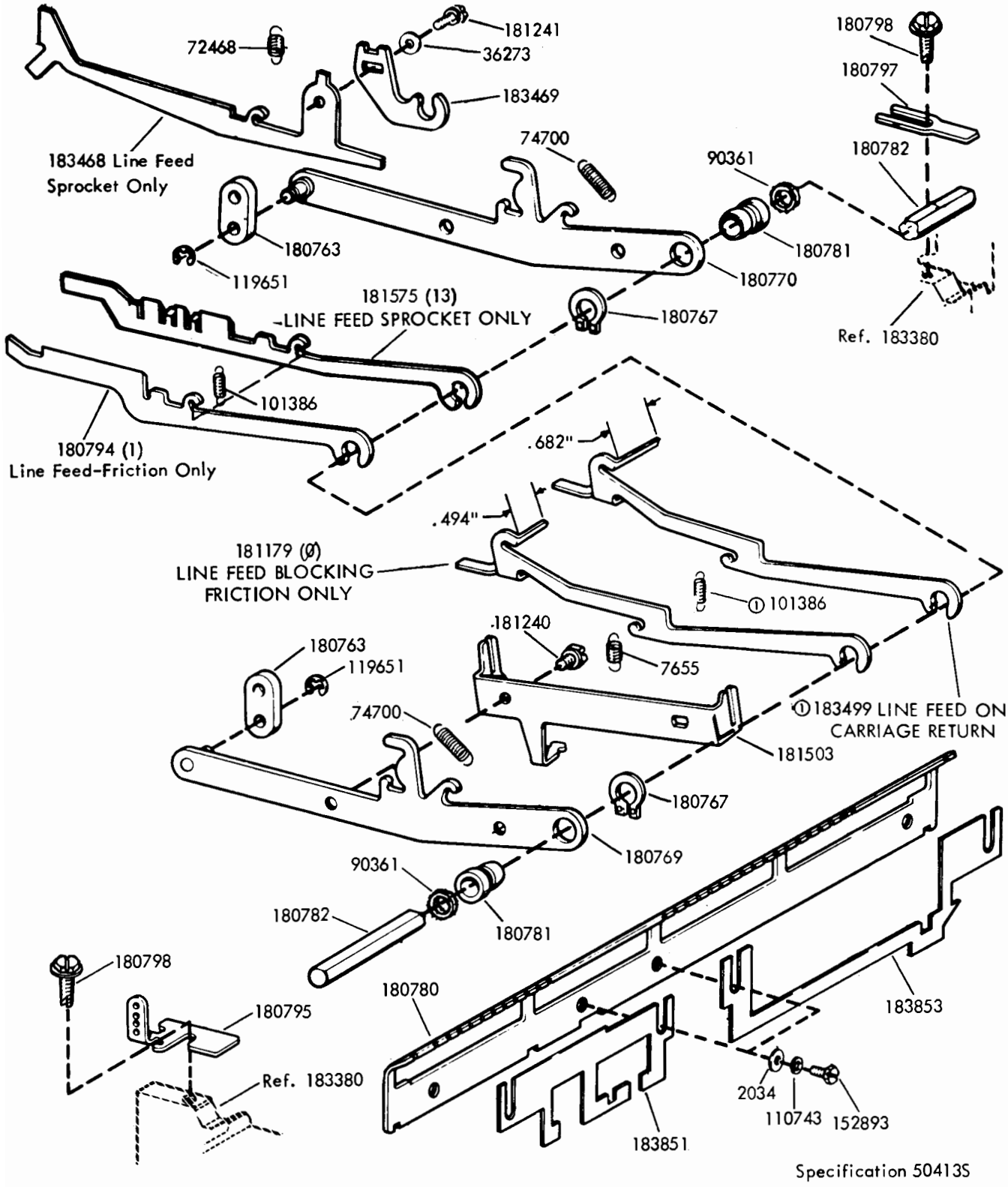

①184157 Modification Kit to provide automatic LF on CR

Number or letter in parenthesis ( ) indicates slot Function Levers may occupy.

FIGURE 24. LINE FEED FUNCTION LEVER MECHANISM

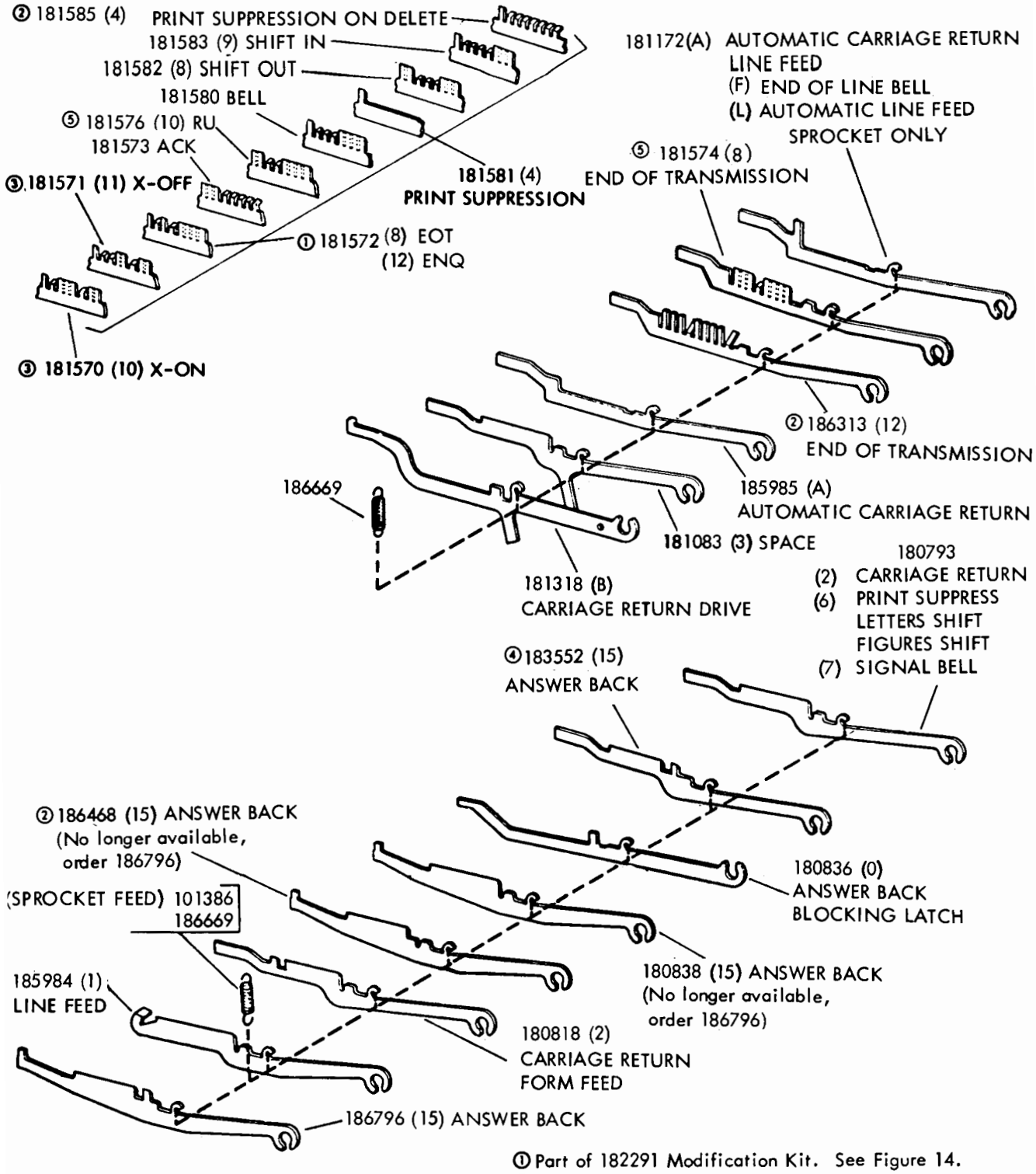

① Part of 182291 Modification Kit. See Figure 14.
② ASCII 1967 Code
③ Peculiar to units equipped with automatic reader control
④ Peculiar to units having two-color printing
⑤ ASCII 1963 Code

NOTE: Number or letter in parenthesis ( ) indicates slot Function Lever may occupy.

FIGURE 25. FUNCTION LEVERS

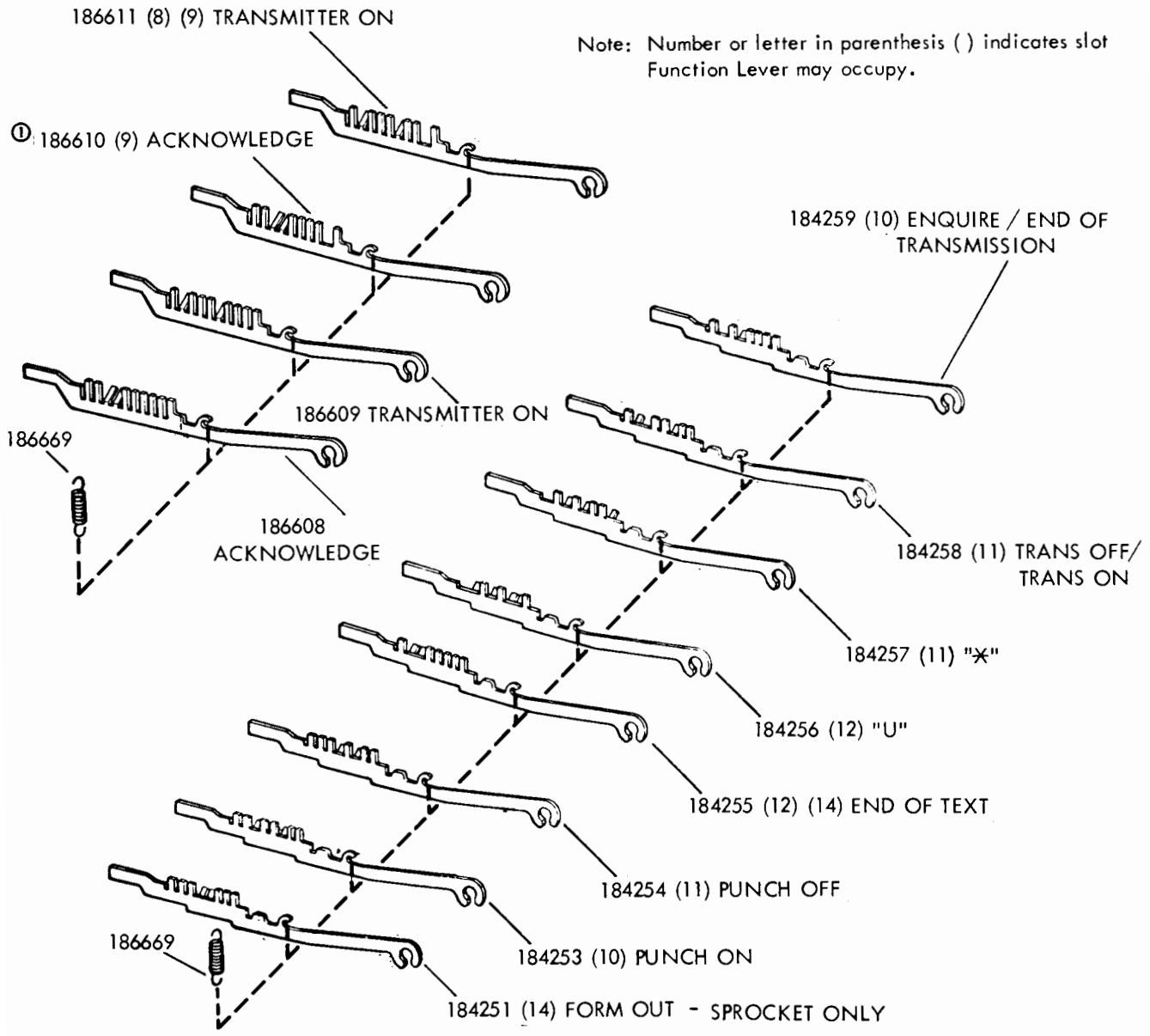

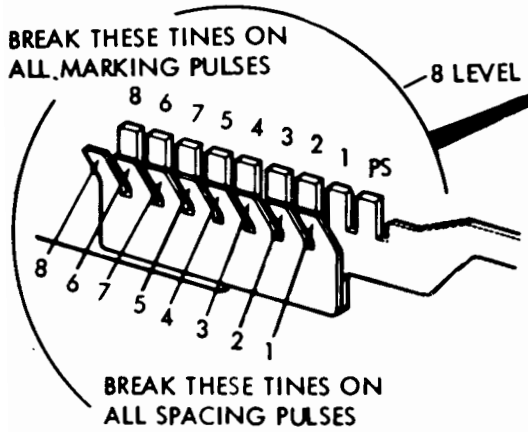

① ASCII 1967 Code

Coding a 180801 Uncoded Universal Function Lever, To perform a special function or contact closure, is to be done before installation of part. For 8 level usage starting at pivoted end, the tines are numbered 8,6,7,5,4,3,2,1 and PS, tines 6 and 7 are not in numerical order. Choose the code combination the lever is to respond to. Note marking pulses. Break off the straight tines whose number corresponds to the marking pulses. Break off the bent tines whose number corresponds to the spacing pulses.

PS-Refers to Print Suppression and is broken off when printing is desired.

On eight level codes, break both tines on position 8 unless respond to parity level (8th) is required.

② Part of 182290 Modification Kit (See Fig. 14)

FIGURE 26. FUNCTION LEVERS (Continued)

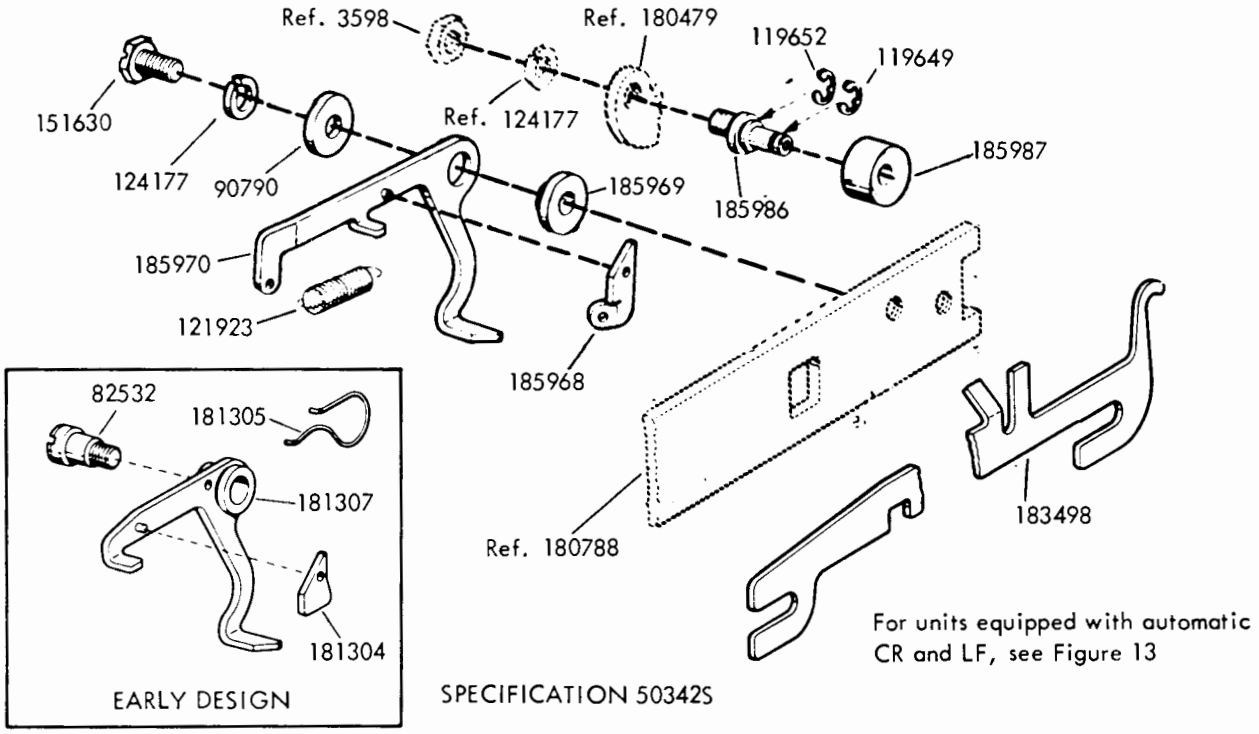

FIGURE 27. 185971 MODIFICATION KIT TO PROVIDE PRINTER WITH AN END-OF-LINE BELL TO RING ON APPROXIMATELY THE 62ND CHARACTER

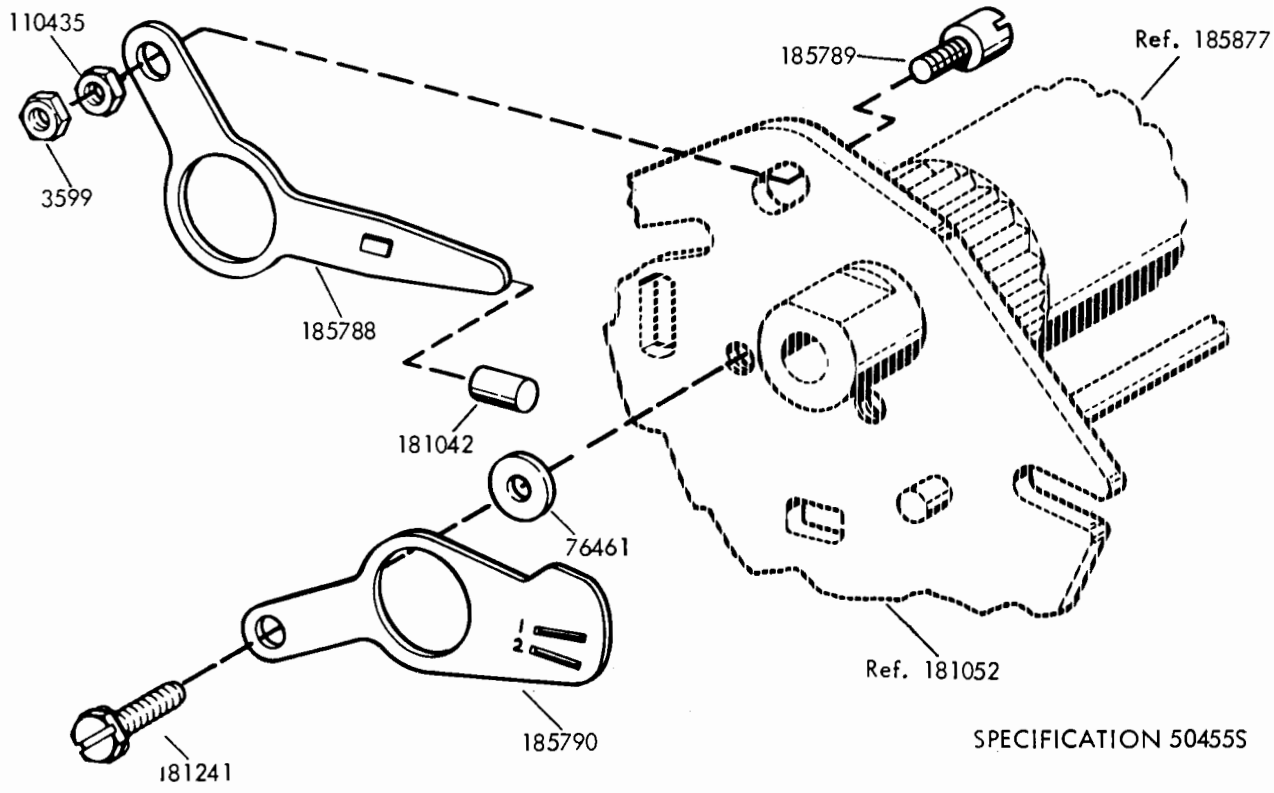

FIGURE 28. 185791 MODIFICATION KIT TO PROVIDE CONTROLLED SINGLE OR DOUBLE LINE FEED FEATURE ON FRICTION FEED PRINTER

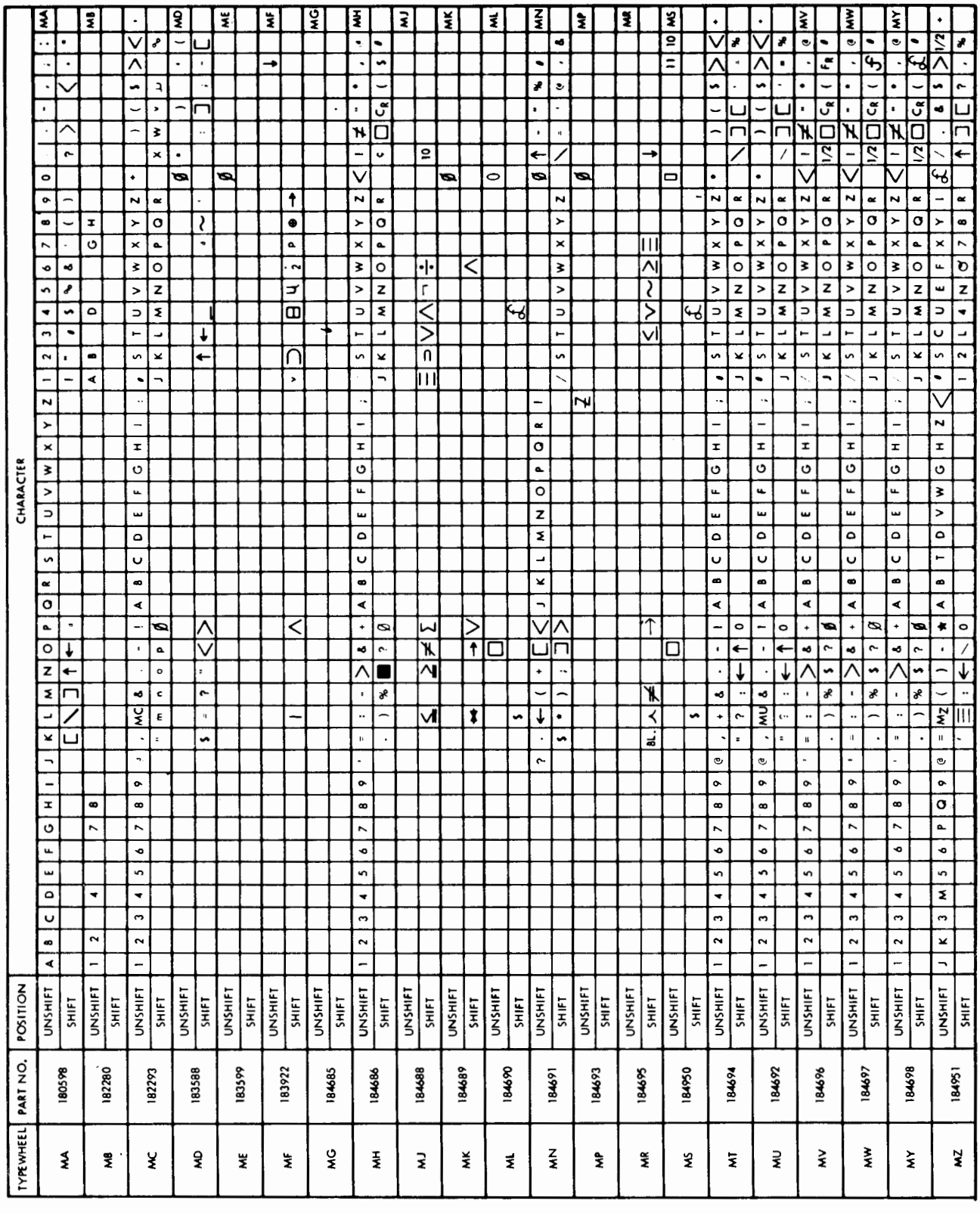

FIGURE 29. TYPEWHEEL CHART

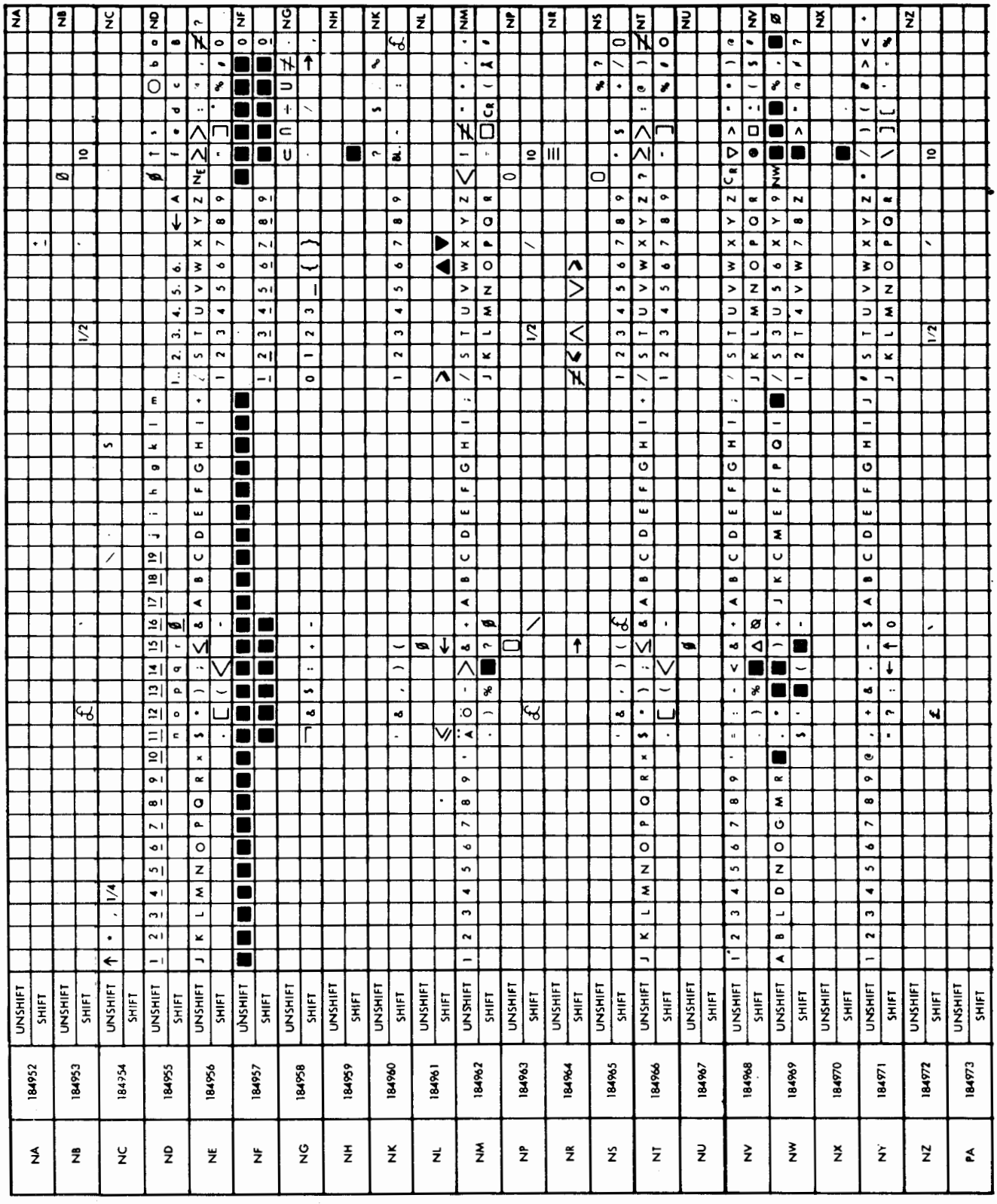

FIGURE 30. TYPEWHEEL CHART (Continued)

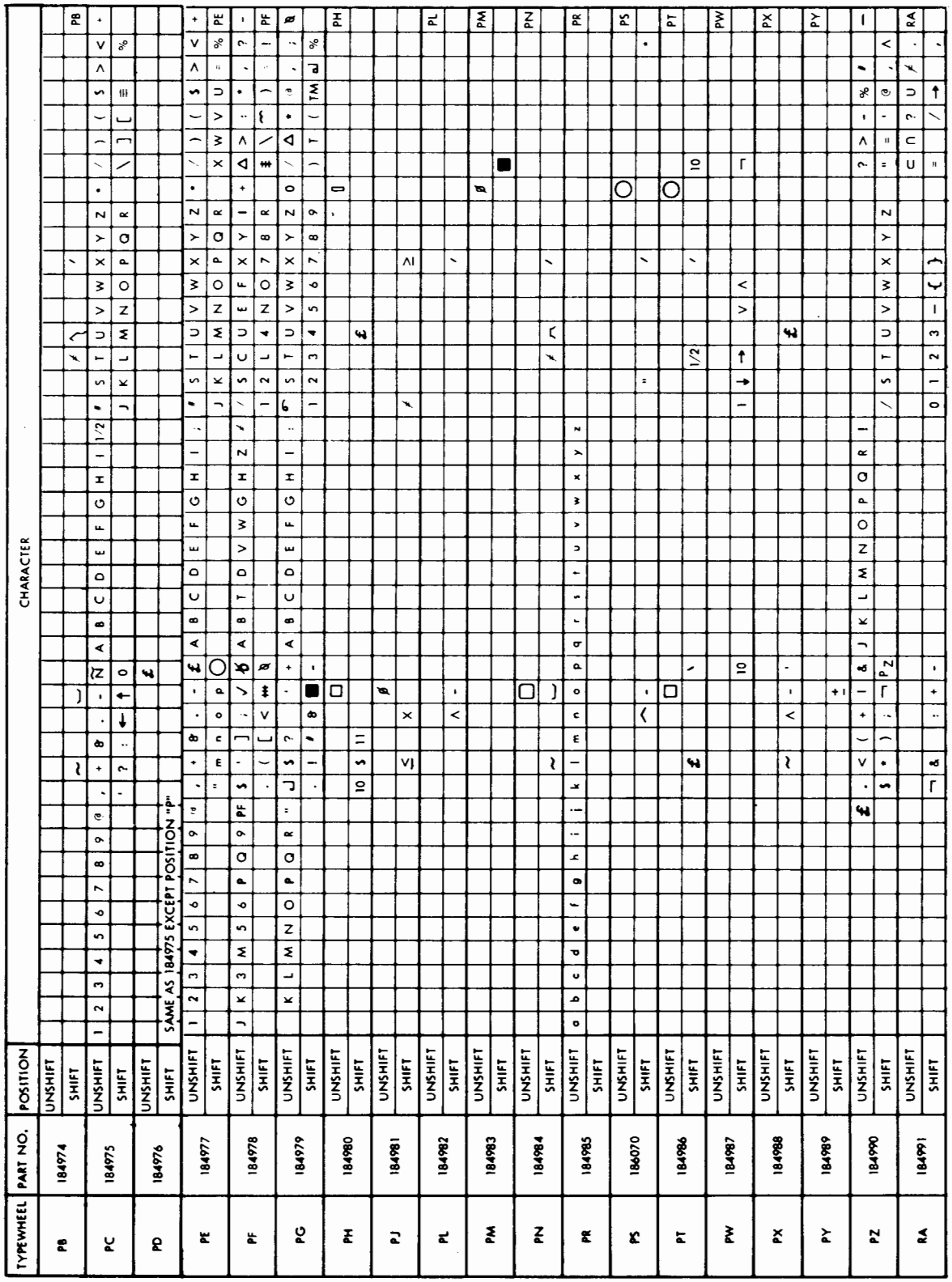

FIGURE 31. TYPEWHEEL CHART (Continued)

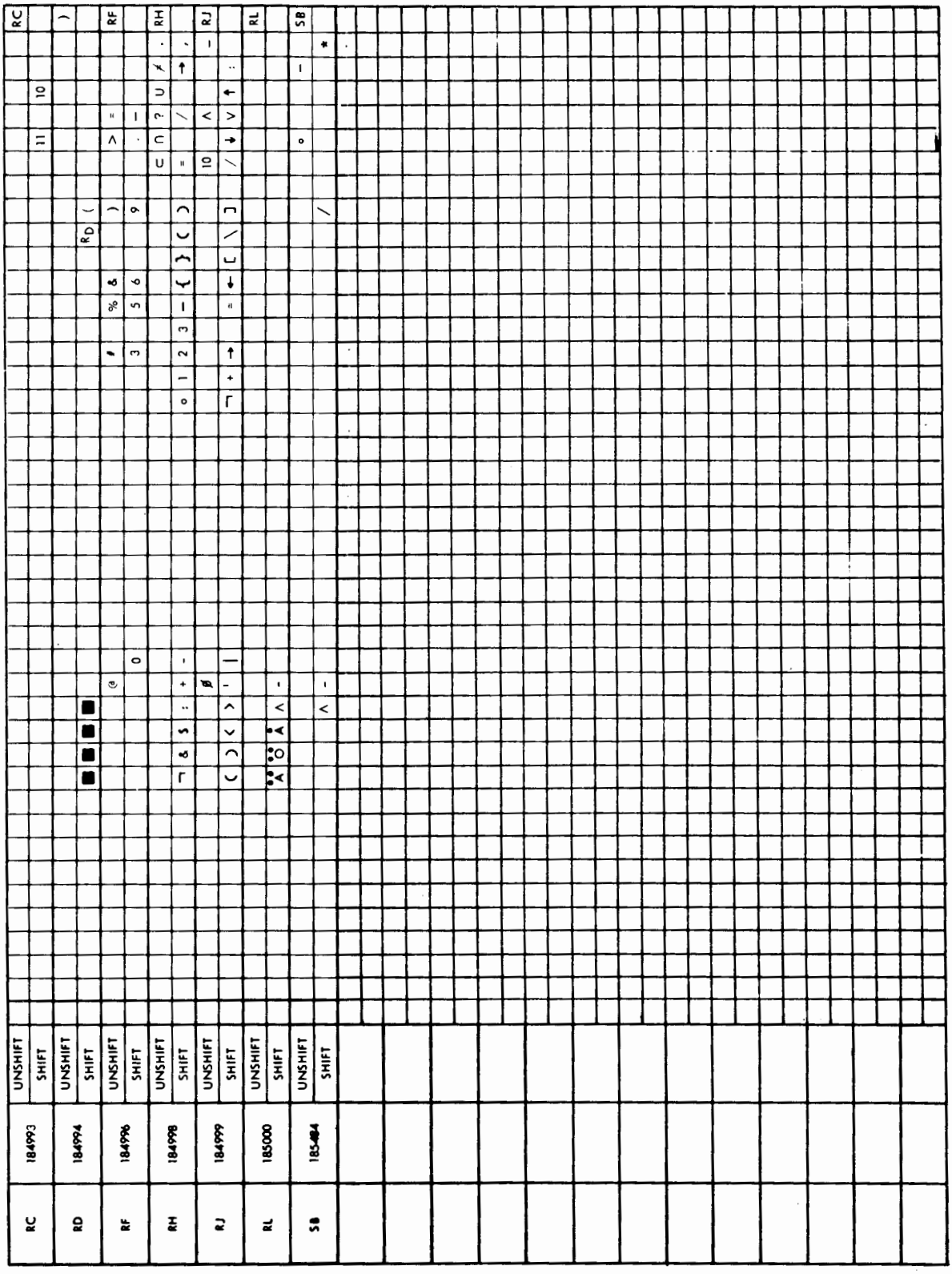

			RC	RD	RF	RH	RJ	RL	SB
		UNSHIFT	)		RF	RH	RJ	RL	SB
	184993	SHIFT							
		UNSHIFT							
	184994	SHIFT		R_D (					
		UNSHIFT			@ % &				
	184996	SHIFT			0 3 5 6				
		UNSHIFT				¬ & $: + -			
	184998	SHIFT				( ) < > ' |	ø		
		UNSHIFT							
	184999	SHIFT							
		UNSHIFT							
	185000	SHIFT							
		UNSHIFT							
	185484	SHIFT							

Notes: Only deviations from the basic typewheel "MA" are shown. A blank space indicates that the character for that position is identical to the basic typewheel.
Solid square (■) indicates printing is suppressed in this position.

FIGURE 32. TYPEWHEEL CHART (Continued)

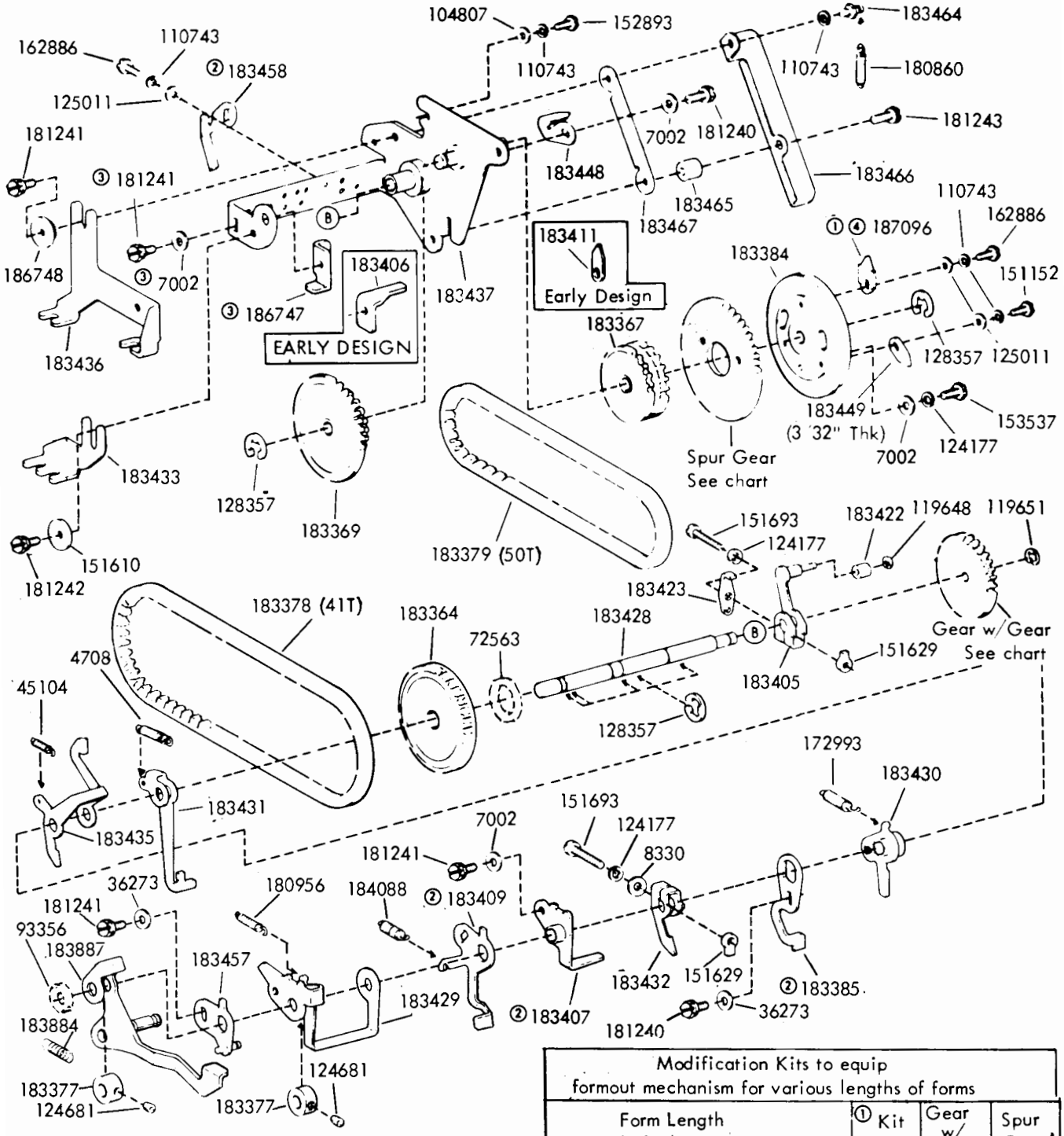

Modification Kits to equip formout mechanism for various lengths of forms					
Form Length in Inches			① Kit No	Gear w/ Gear	Spur Gear
11	5-1/2	3-2/3	183877	183391	183398
9	4-1/2	3	183878	183392	183399
7	3-1/2	2-1/3	183879	183393	183400
8	4	2-2/3	183880	183394	183401
8 1/2	———	2-5/6	183881	183395	183402
10	5	3-1/3	183882	183396	183403
6	———	———	183883	183397	183404

① The required number of 183411 Early Design and 187096 Late Design Cam Plates and mounting hardware are furnished with each kit Specification 50410S

② Early design parts. See Figure 34 for Late Design.

③ Downstop bracket, flat washer and mounting screw sealed in place at Factory. Not for field installation.

④ Refer to Note④Figure 3.

FIGURE 33. FORM OUT MECHANISM - SPROCKET FEED

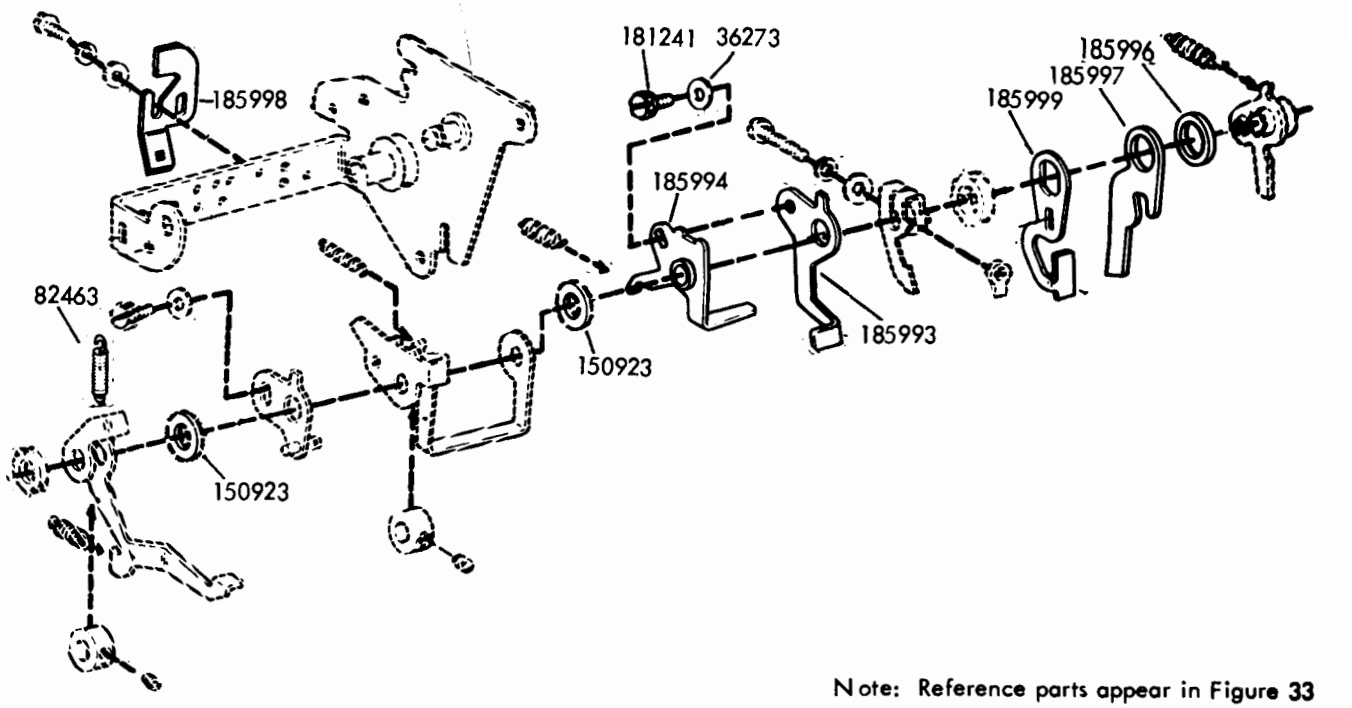

Note: Reference parts appear in Figure 33

FIGURE 34. LATER DESIGN FORM-OUT MECHANISM - SPROCKET FEED

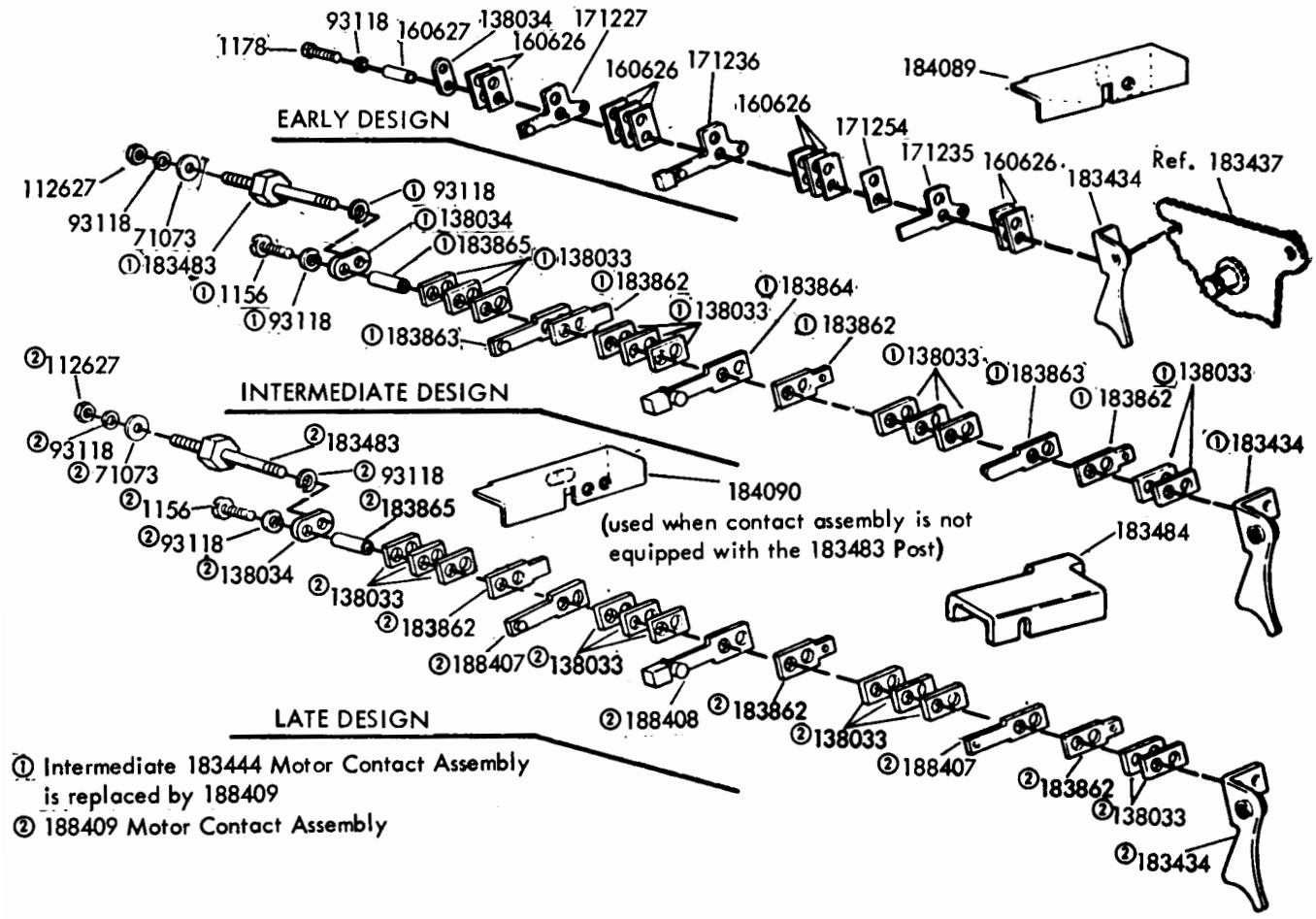

FIGURE 35. FORM-OUT CONTACT - SPROCKET FEED

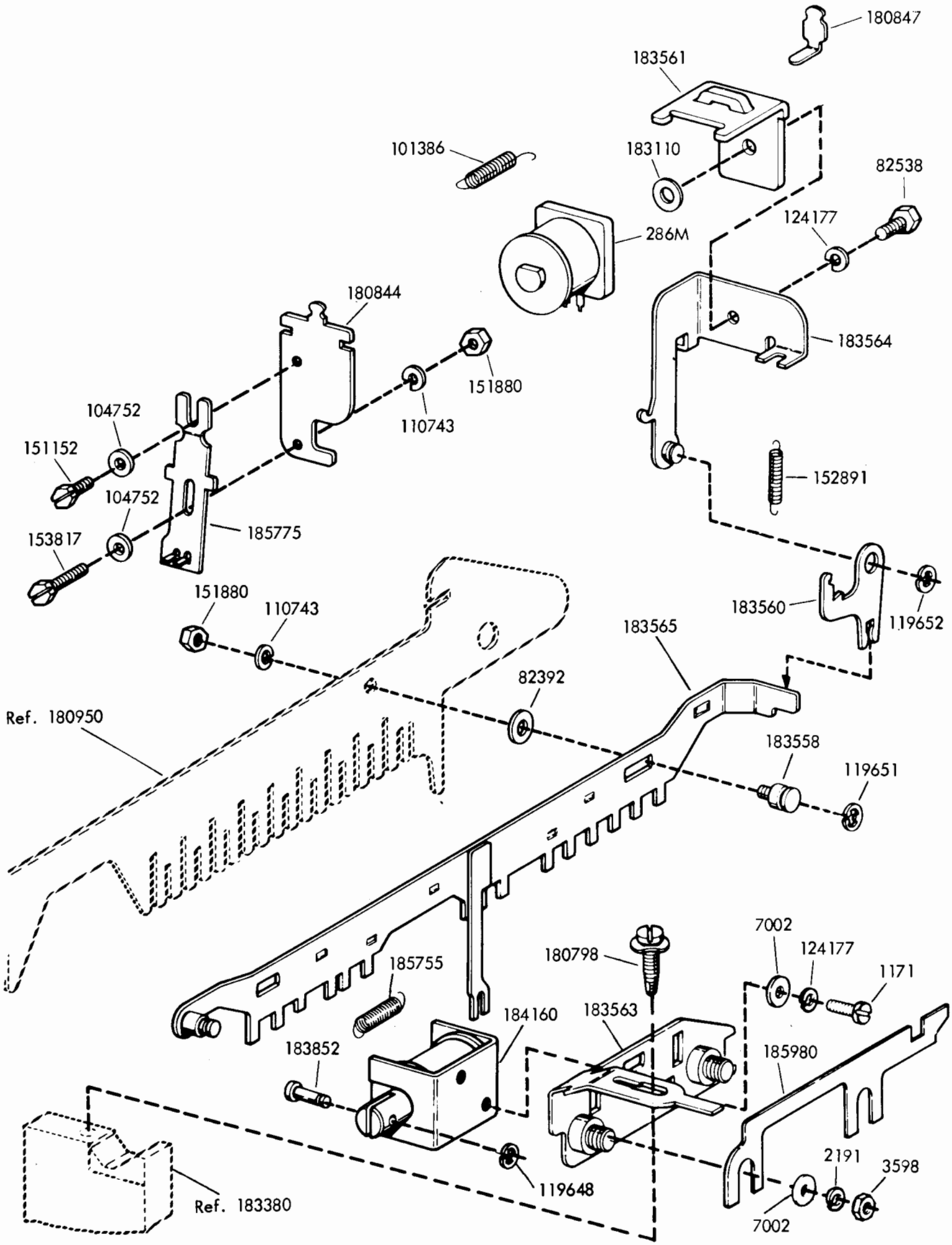

FIGURE 36. SOLENOID PRINT - NONPRINT RESET MECHANISMS

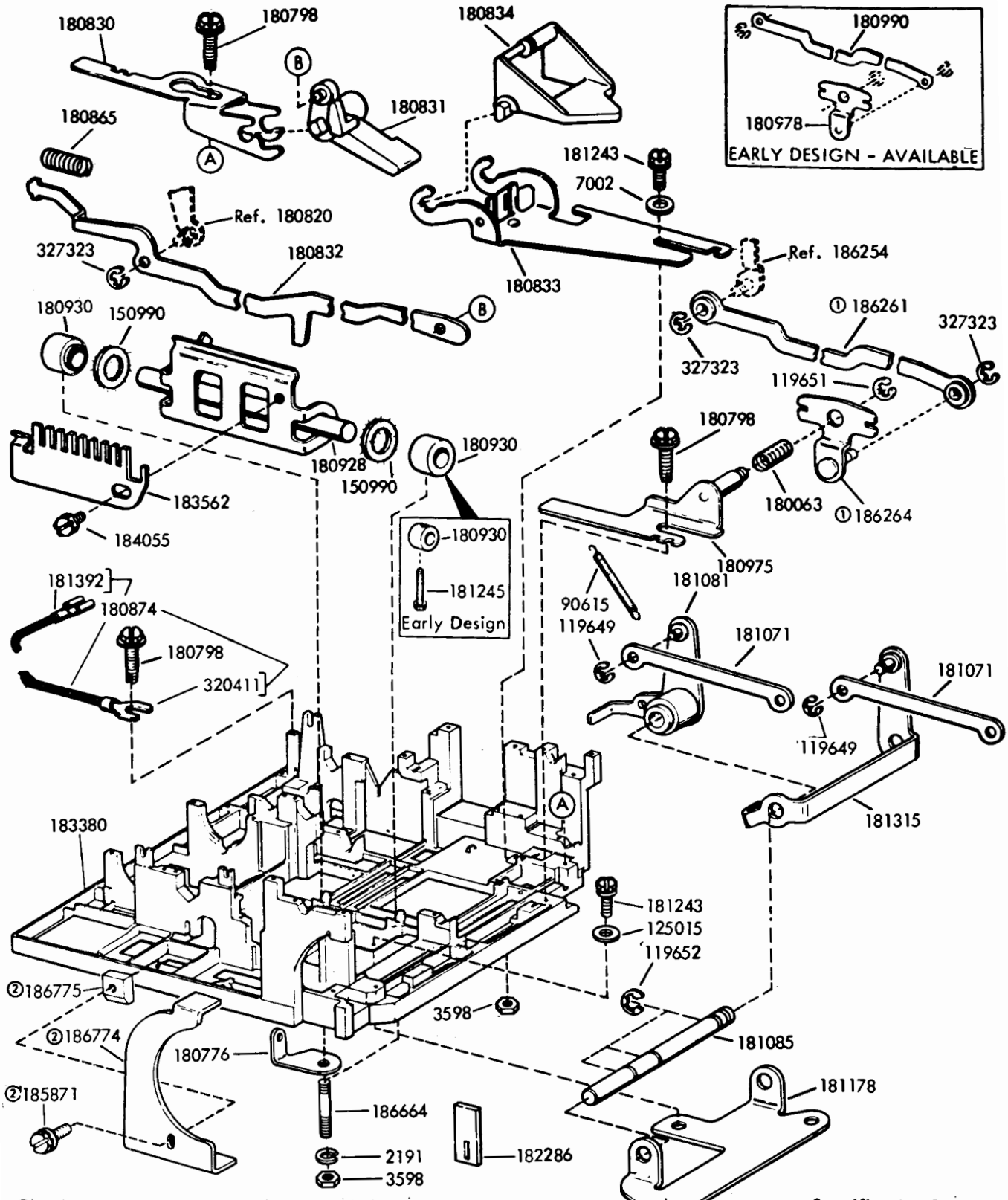

①Early and Late Design distributor trip linkage parts are interchangeable in sets only. See note⑦,③ and ④ in Figures 15, 18 and 19 respectively.

Specification 507145

②186776 Modification Kit to provide a Handle.

FIGURE 37. BASE

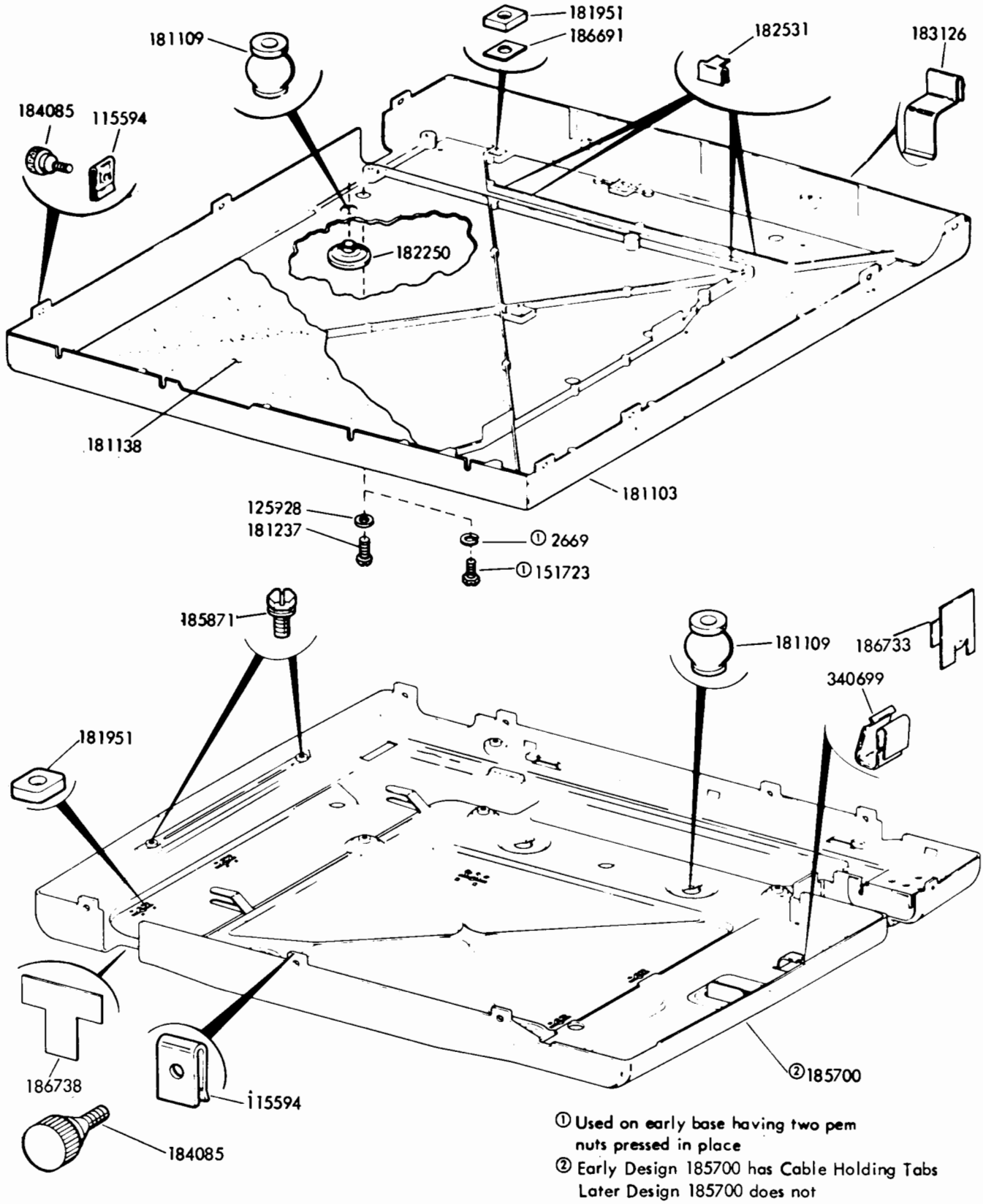

FIGURE 38. SUB BASES

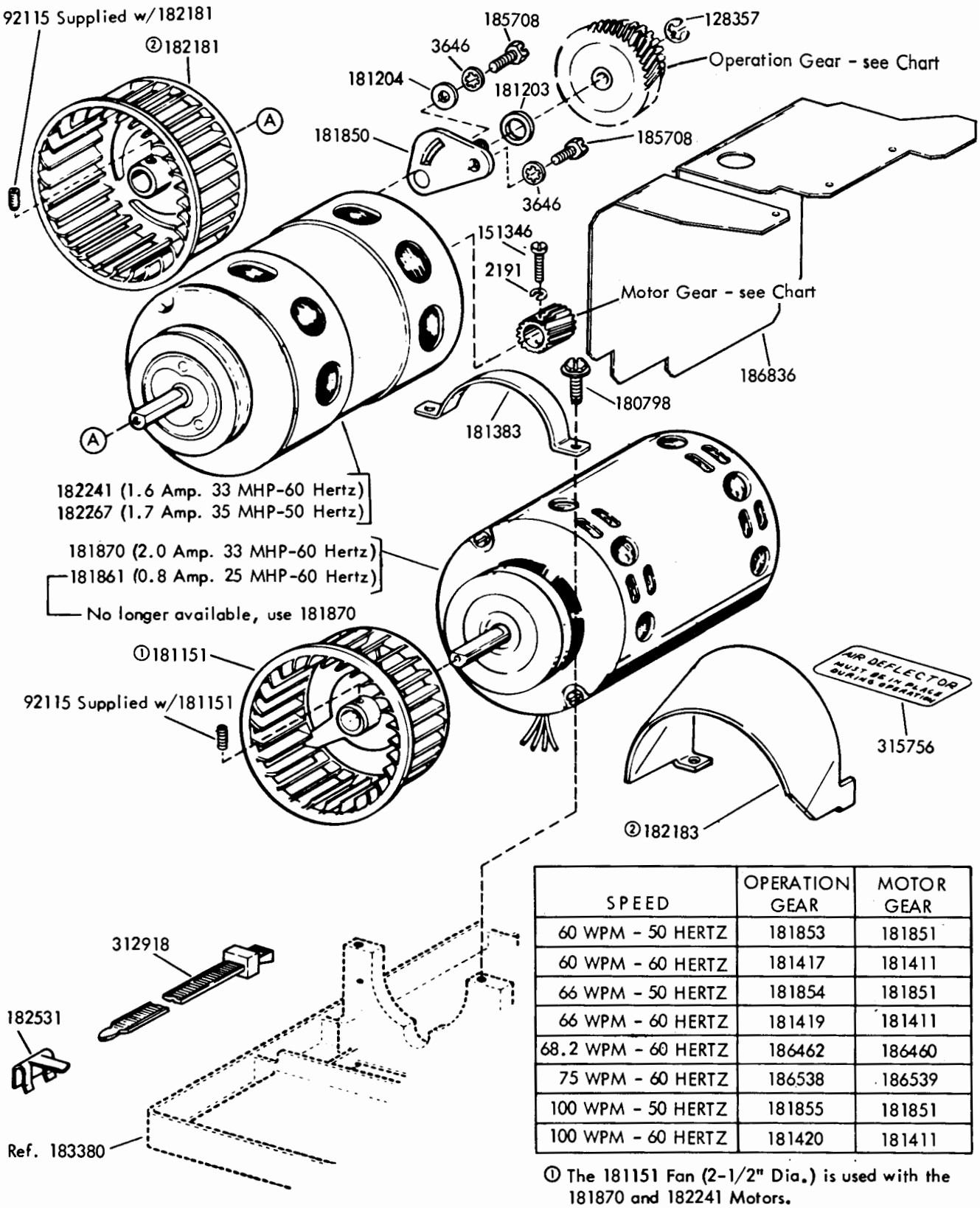

SPEED	OPERATION GEAR	MOTOR GEAR
60 WPM - 50 HERTZ	181853	181851
60 WPM - 60 HERTZ	181417	181411
66 WPM - 50 HERTZ	181854	181851
66 WPM - 60 HERTZ	181419	181411
68.2 WPM - 60 HERTZ	186462	186460
75 WPM - 60 HERTZ	186538	186539
100 WPM - 50 HERTZ	181855	181851
100 WPM - 60 HERTZ	181420	181411

① The 181151 Fan (2-1/2" Dia.) is used with the 181870 and 182241 Motors.

② The 182181 Fan (3" Dia.), and the 182183 Air Deflector are used with the 182267 Motor.

FIGURE 39. MOTORS

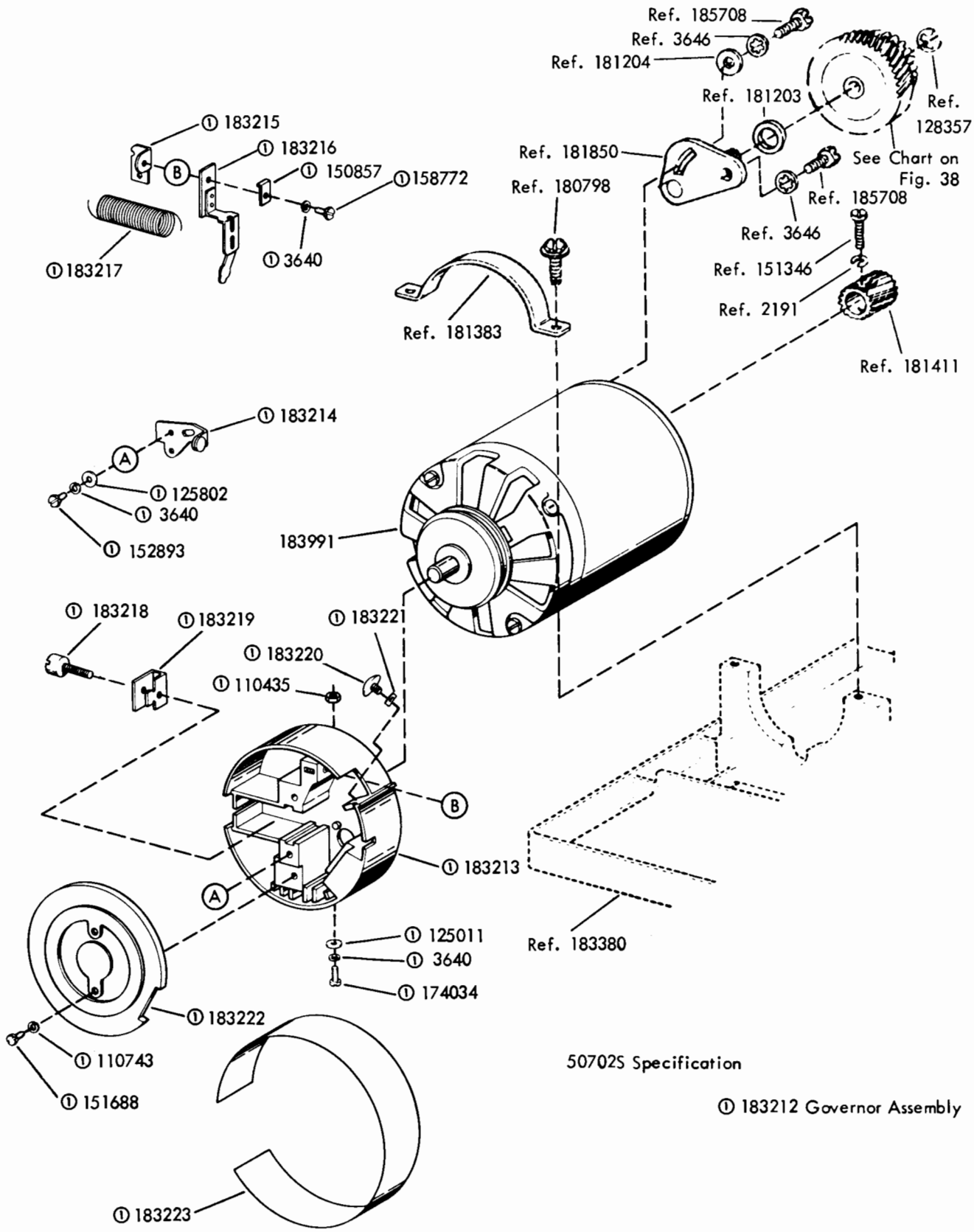

FIGURE 40. 333521 MOTOR ASSEMBLY

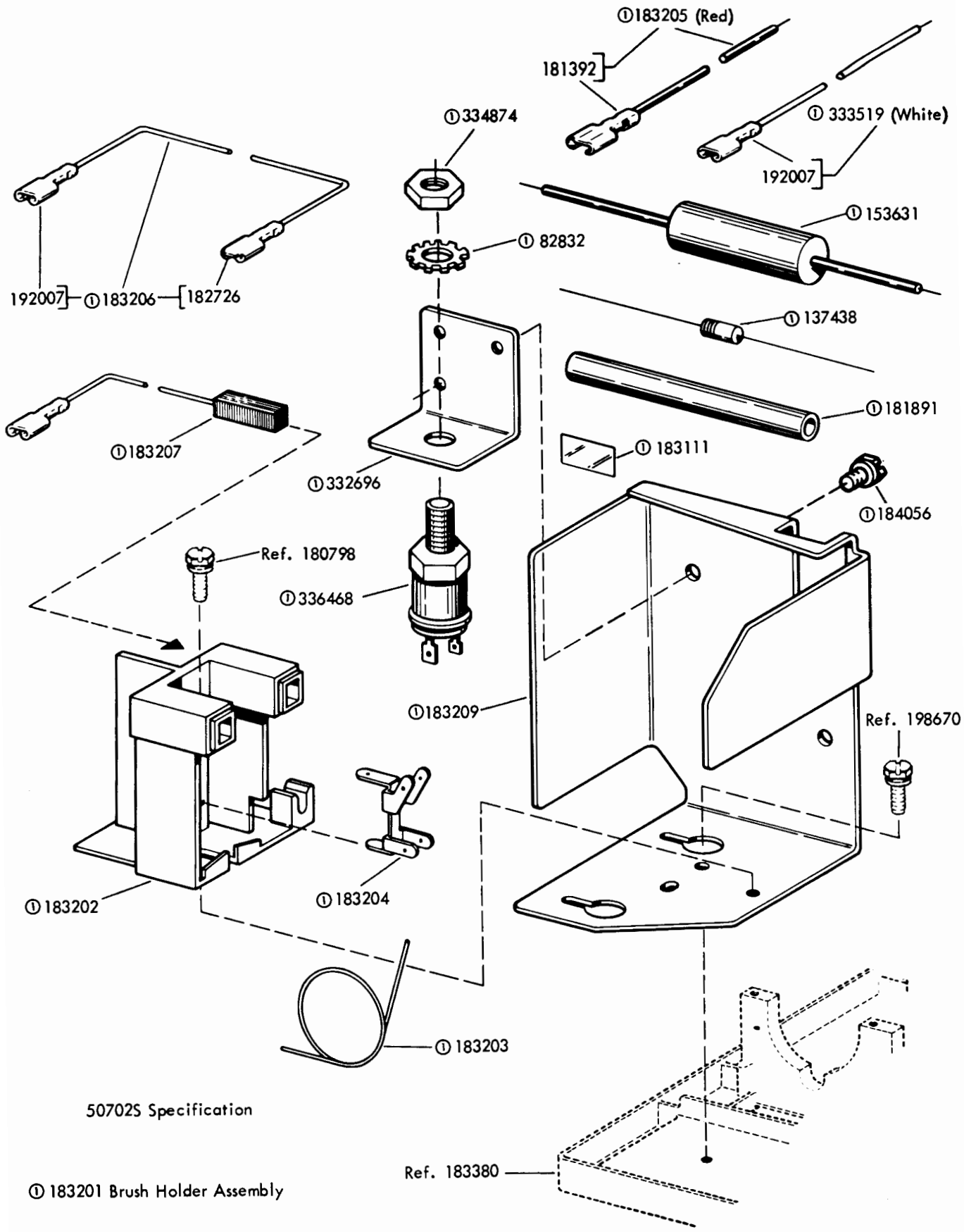

FIGURE 41. 333521 MOTOR ASSEMBLY (Continued)

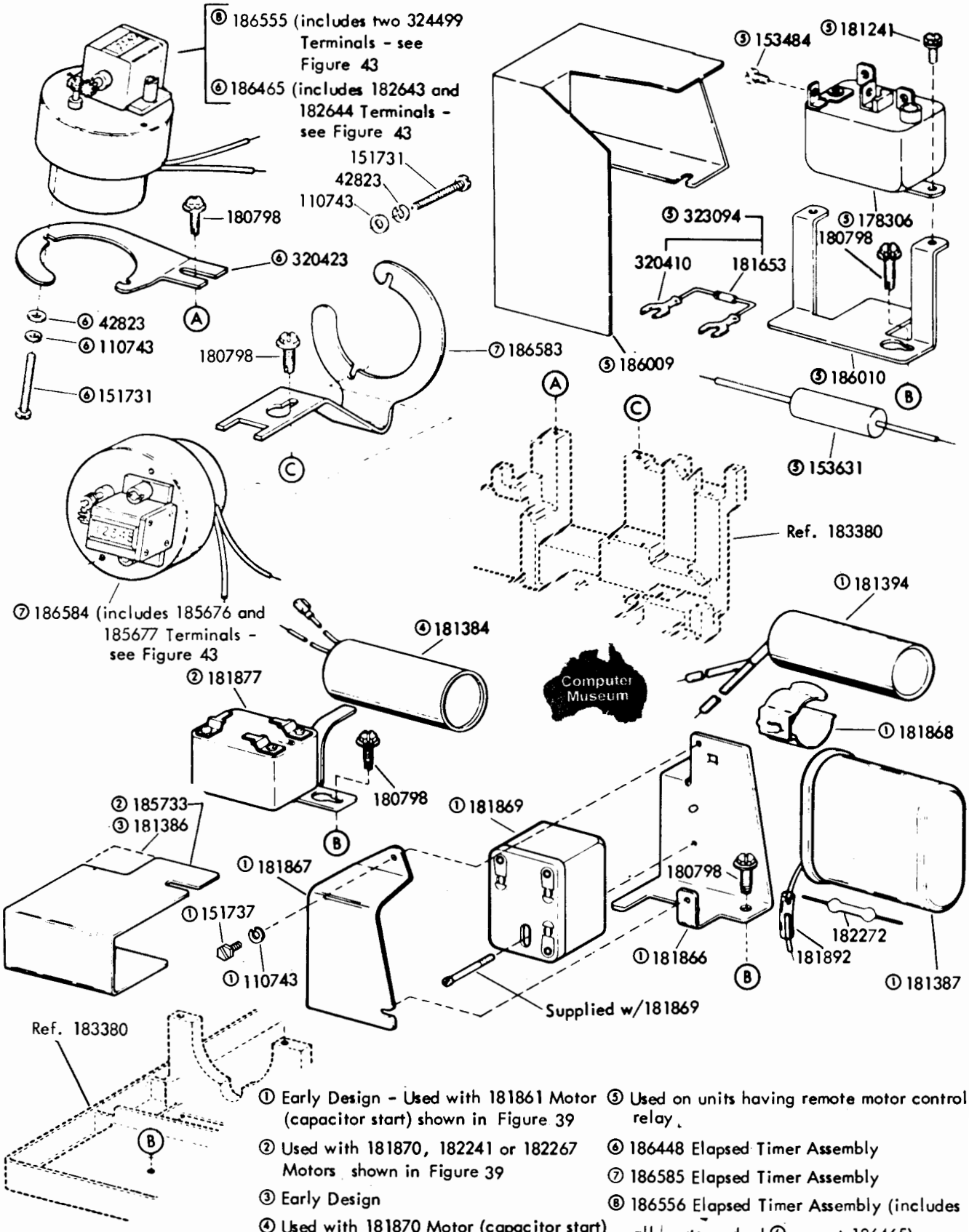

① Early Design - Used with 181861 Motor (capacitor start) shown in Figure 39

② Used with 181870, 182241 or 182267 Motors shown in Figure 39

③ Early Design

④ Used with 181870 Motor (capacitor start) shown in Figure 39

⑤ Used on units having remote motor control relay.

⑥ 186448 Elapsed Timer Assembly

⑦ 186585 Elapsed Timer Assembly

⑧ 186556 Elapsed Timer Assembly (includes all parts marked ⑥ except 186465)

FIGURE 42. ELECTRICAL COMPONENTS

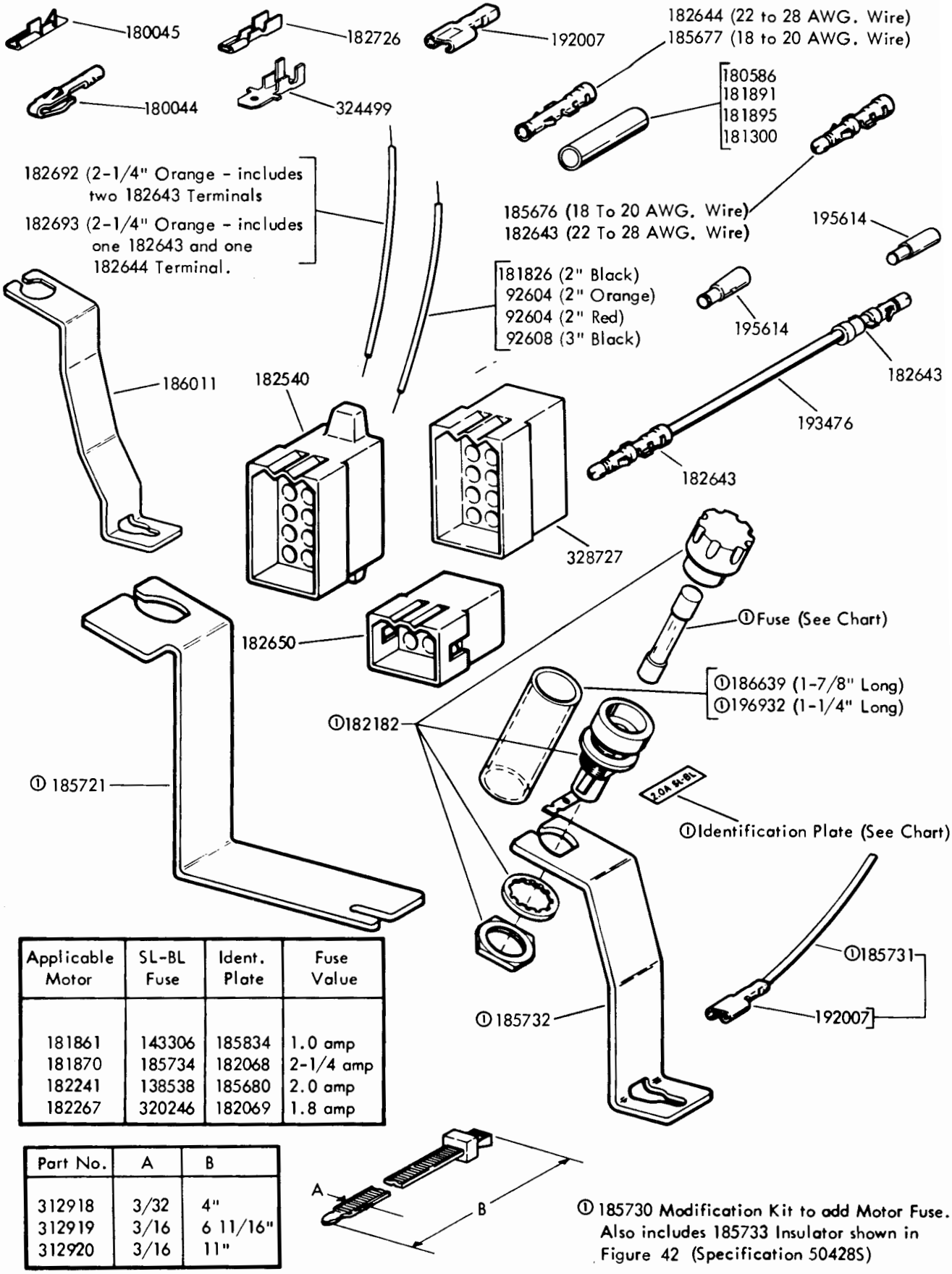

Applicable Motor	SL-BL Fuse	Ident. Plate	Fuse Value
181861	143306	185834	1.0 amp
181870	185734	182068	2-1/4 amp
182241	138538	185680	2.0 amp
182267	320246	182069	1.8 amp

Part No.	A	B
312918	3/32	4"
312919	3/16	6 11/16"
312920	3/16	11"

① 185730 Modification Kit to add Motor Fuse. Also includes 185733 Insulator shown in Figure 42 (Specification 50428S)

FIGURE 43. CABLE COMPONENTS

NUMERICAL INDEX

Part Number	Description and Page Number
272M	Coil, Magnet 22
276M	Coil, Magnet 21
279M	Coil, Magnet 21
286M	Coil, Magnet 33
295M	Coil, Magnet 21
300M	Coil, Magnet 21
1036	Nut, 6-40 Hex 2
1156	Screw, 2-56 x 9/16 Fil 32
1164	Screw, 2-56 x 3/16 Fil 5
1171	Screw, 6-32 x 3/16 Fil 32,33
1178	Screw, 2-56 x 7/16 Fil 32
1210	Screw, 2-56 x 5/8 Fil 5
2034	Washer, Flat 6,10,20,23
2167	Ball, Bearing 9
2191	Lockwasher 2,4,5,7,9 to 12 16,19,22,33,34,36,37
2605	Spring 20
2669	Lockwasher 6,35
3598	Nut, 6-40 Hex 2,4,6,7,8, 9,10,14,16,17,18,19,20, 21,22,26,33,34
3599	Nut, 4-40 Hex 2,4,6,7,9, 10,15,20,26
3606	Nut, 6-40 Hex 2,8,19
3608	Spring 6
3640	Lockwasher 17,37
3646	Lockwasher 2,5,36,37
3864	Spring 21
4703	Spring 10
4708	Spring 31
5599	Nut, 8-32 Hex 21
7001	Washer, Flat 19
7002	Washer, Flat 2,3,4,5,6,7, 8,9,10,13,15,17,18,19, 20,22,31,33,34
7655	Spring 23
8330	Washer, Flat 13,31
31636	Spring 5,20
33765	Washer, Flat 3
36273	Washer, Flat 12,23,31,32
36351	Spring 14
41732	Plate, Clamp 21
42661	Spring 10
42823	Washer, Flat 39
44048	Washer, Flat 3,16,20
45027	Spring 8
45104	Spring 31
49054	Screw, 2-56 x 3/16 Flat 6
49420	Spring 15
70388	Spring 10
71073	Washer, Flat 5,16,17,32
71681	Spool, Ribbon 6
72468	Spring 23
72509	Lockwasher 18
72563	Washer, Felt 31
74547	Collar 13
74700	Spring 3,23
74701	Spring 10,12
74716	Bushing, Insulating 17
74722	Washer, Flat 4
76422	Spring 13
76461	Washer, Flat 2,21,26
78103	Screw, 6-40 x 1-3/16 Hex 21
80273	Washer, Felt 12
80758	Spring 3
80945	Spring 13
81726	Terminal 17
81731	Spring 8,20
82392	Shim, .004" Thk 14,33
82463	Spring 32
82532	Screw, 6-40 Shoulder 26
82538	Screw, 6-40 x 5/16 Hex 21,33
82547	Insulator, .094" Thk 17
82548	Insulator, .062" Thk 17
82832	Lockwasher 38
83877	Spring 10,17
84226	Spring 3,20
84575	Spring 3,8,10,14
86283	Spring 15
87398	Washer, Flat 4
87402	Spring 21
90096	Washer, Insulating 19
90361	Washer, Felt 23
90432	Washer, Flat 10
90615	Spring 3,34
90790	Washer, Flat 10,15,16,26
91120	Spring 3
92115	Setscrew, 8-32 36
92260	Lockwasher 11,12
92527	Lockwasher 21
92604	Jumper, 2" Lg 40
92608	Jumper, 3" Lg 40
93117	Lockwasher 3,5,16
93118	Lockwasher 5,17,32
93356	Washer, Felt 31
93984	Lockwasher 19
93985	Lockwasher 2,3,5,16
98718	Washer, Flat 19
100759	Screw, 4-40 x 3/16 Flat 11
101386	Spring 4,17,21,22,23,24, 33
104752	Washer, Flat 21,22,33
104807	Washer, Flat 7,21,31
107116	Lockwasher 6
110435	Nut, 4-40 Hex 2,26,37
110743	Lockwasher 4,6,7,9,10,14, 15,17,20,21,22,23,31, 33,37,39
111410	Washer, Flat 9,19
111640	Screw, 2-56 x 7/32 Fil 3
112127	Hinge 17
112128	Retainer 17
112620	Screw, 4-40 x 1/2 Hex 16
112626	Nut, 10-32 Hex 6
112627	Nut, 2-56 Hex 32
112630	Spring 3
112634	Spring 6
113384	Plate 17
114107	Spring 10
115594	Nut, Speed 35
119421	Washer, Flat 2,5
119648	Ring, Retaining 8,10,19, 22,31,33
119649	Ring, Retaining 3,4,7,8, 9,10,13,15,16,17,26,34
119650	Ring, Retaining 3
119651	Ring, Retaining 2,3,4,6, 7,8,10,11,1 2,14,23,31,33, 34
119652	Ring, Retaining 4,8,10, 26,33,34
119653	Ring, Retaining 6,19,20
119654	Ring, Retaining 6,20
120595	Follower, Cam 17
121018	Nut, 4-40 Hex 9
121100	Spring 17
121630	Washer, Flat 21
121923	Spring 26
124177	Lockwasher 2,3,4,7,8,9, 10,14,15,16,17,18,19,20, 21,26,31,33
124681	Setscrew, 6-40 6,12,13,16, 31
125011	Washer, Flat 15,17,31,37

NUMERICAL INDEX (Continued)

Part Number	Description and Page Number
125015	Washer, Flat 14,16,17,18, 34
125112	Screw, 2-56 x 1/8 Fil 17
125181	Screw, 2-56 x 3/8 Fil 16
125206	Screw, 6-32 x 5/8 Fil 11
125252	Spring 15
125802	Washer, Flat 15,37
125928	Washer, Flat 35
128357	Ring, Retaining 21,31,36,37
137438	Resistor, 100 Ohm 38
138033	Insulator, .031" Thk 5, 32
138034	Plate, Clamp 5,32
138538	Fuse, SL-BL 2 Amp 40
143306	Fuse, SL-BL 1 Amp 40
145887	Spring, Contact 17
145968	Nut, No.6 Speed 19
150026	Lever, Shoe Release 11,12
150029	Wick, Felt 11,12,18,19
150040	Screw, 6-40 x 5/8 Fil 13, 18
150043	Shoe, Secondary Clutch 11,12,18,19
150044	Shoe, Primary Clutch 11,12,18,19
150241	Spring 11,12,18,19
150830	Bushing, Shoulder 12
150841	Bearing 12
150857	Clamp 37
150923	Washer, Felt 32
150930	Washer, Felt 11,12,16
150990	Washer, Felt 34
151152	Screw, 4-40 x 3/16 Hex 7, 9,10,21,22,31,33
151346	Screw, 6-40 x 3/8 Fil 36,37
151397	Spring 17
151413	Washer, Flat 10
151603	Spacer 17
151610	Washer, Flat 19,31
151618	Screw, 6-40 x 7/16 Fil 11,12
151629	Nut, 6-40 Lug 6,13,31
151630	Screw, 6-40 x 1/4 Hex 9,10, 17,20,26
151631	Screw, 6-40 x 5/16 Hex 3, 16
151640	Lever, Shoe Release 19
151688	Screw, 4-40 x 5/8 Fil 37
151693	Screw, 6-40 x 9/16 Fil 7,31
151722	Screw, 6-40 x 3/16 Hex 2,4,5
151723	Screw, 10-32 x 3/8 Hex 35
151731	Screw, 4-40 x 7/8 Fil 15, 39
151737	Screw, 4-40 x 11/64 Hex 6, 39
151880	Nut, 4-40 Hex 9,14,21, 22,33
152129	Spring 22
152425	Post, Spring 17
152426	Nut, 6-40 Self-Locking 17
152441	Washer, Flat 4,10
152890	Washer, Flat 21
152891	Spring 33
152893	Screw, 4-40 x 1/4 Hex 7, 15,17,21,23,31,37
153267	Washer, Felt 6
153484	Screw, 6-32 Spl 39
153537	Screw, 6-40 x 9/32 Hex 31
153631	Network, Spark Suppression 38,39
153799	Screw, 4-40 x 21/64 Hex 6,15
153817	Screw, 4-40 x 3/8 Hex 4, 6,21,22,33
153839	Screw, 6-40 x 5/8 Hex 11,12
155750	Sleeve, 3/32 ID x 1/2" Lg, Insulating 21,22
156169	Washer, Felt 21
156509	Washer, Flat 10
156536	Screw, 4-40 x 1/8 Fil 9
156558	Washer, Felt 10
156572	Washer, Felt 9
157899	Arm, NC Contact 15
158186	Screw, 4-40 x 7/32 Fil 4
158189	Washer, Felt 10
158772	Screw, 4-40 x 5/8 Hex 21,37
160455	Spring 22
160626	Insulator .031" Thk 32
160627	Bushing, Insulating 32
161100	Spring, Contact 17
161346	Washer, Felt 10
161347	Washer, Felt 16
162573	Retainer 12
162881	Plate 17
162886	Screw, 4-40 x 7/32 Hex 31
164958	Screw, 4-40 x 1/2 Hex 19
171227	Spring, Contact 32
171235	Spring, Contact 32
171236	Spring, Contact 32
171254	Insulator, .015" Thk 32
171259	Spring 22
172591	Spring, Contact Arm 15
172993	Spring 31
173807	Setscrew, 6-40 4
174034	Screw, 4-40 x 13/16 Hex 17,37
178306	Relay, Power 39
179145	Bushing, Insulating 21
180044	Terminal, Tab Type 22,40
180045	Terminal, Tab Type 22,40
180063	Spring, Compression 34
180463	Post, Bail Pivot 10
180464	Pulley, Carriage Return Spring 10
180465	Shaft, Carriage 6
180466	Ring, Retaining 9
180467	Bearing, Ball 9
180468	Bearing, Ball 9
180469	Link 8,9
180470	Roller 8
180471	Block 9
180473	Shaft 9
180474	Stud 9
180475	Bushing 9
180476	Screw, 6-40 Spl 8
180477	Bracket 8
180478	Guide, Nylon 8
180479	Bracket 8,26
180480	Arm w/Stud 9
180482	Arm w/Shaft 7
180483	Arm, Stop 8
180484	Arm, Stop 8
180485	Arm w/Spring 9
180486	Link 8
180487	Stud 9
180488	Shaft 7
180489	Lever w/Pin 6
180491	Shaft 9
180492	Arm 8
180493	Lever, Trip 8
180495	Link, Ribbon 7
180496	Arm, Stop 8
180497	Spring, Print Hammer 7
180498	Bracket 6
180500	Frame 6,7,8,9

NUMERICAL INDEX (Continued)

Part Number	Description and Page Number
180501	Arm w/Stud 7,8
180502	Head, Print Hammer 7
180503	Shaft w/Spacer 7,9.
180505	Plate, Left Guide 7
180506	Plate, Right Guide 7
180508	Stud, Eccentric 8
180509	Slide, No. 3 Pulse 8
180510	Slide, Common 8
180511	Slide, No. 1 & No. 2 Pulse 8
180512	Slide w/Plates 8
180513	Slide, No. 5 Pulse 8
180514	Slide, No. 4 Pulse 8
180517	Lever, Latch 8
180518	Plate 7
180519	Rack 7
180520	Arm 8
180521	Slide, Print Suppression 8
180522	Bushing 8
180526	Bail w/Stud 9
180528	Lever w/Hub 9
180534	Plate, Guide 7
180537	Link 8
180538	Shaft 8
180539	Bail w/Stud 8
180540	Bail, Print Hammer 7,8
180541	Plate w/Posts 6,7
180543	Base, Ribbon Unit 6
180545	Bracket 10
180546	Post 10
180547	Stud, Eccentric 6
180548	Plate 7
180549	Bracket 7
180552	Post 7
180553	Spring 9
180554	Bushing 7
180555	Spring 7
180556	Plate, Gauge 9
180557	Lever w/Stud 8
180558	Collar 8
180559	Shaft 8
180562	Link, Left Ribbon 7
180563	Stud, Eccentric 7
180564	Bracket, Lock 7
180566	Hub w/Pinion 9
180568	Bracket, Guide 7
180569	Spring, Compression 7
180571	Plate 9
180574	Stud, Eccentric 9
180575	Bearing, Ball 9,16
180576	Bearing, Ball 9
180578	Bracket w/Post 10
180579	Bracket w/Hub 9
180580	Lever w/Stud 8,9
180581	Roller, Typewheel 7
180584	Lever 9
180585	Spring 8
180586	Sleeve, 5/32 ID x 21/32 Lg Insulating 8,40
180591	Spring 7
180595	Setscrew, 4-40 8
180598	Typewheel, MA 27
180606	Bail 9
180607	Arm, Adjusting 9
180608	Bracket, Left 2,5
180610	Shield 7
180641	Camsleeve 18
180642	Pushbar 17
180643	Lever, Blocking 17
180644	Lever, Blocking 17
180645	Lever, Selector 17
180646	Lever, Shoe Release 18
180648	Arm, Follower 13
180649	Spring 17
180654	Knob, Range 18
180655	Plate, Side 17
180657	Bracket, Guide 17
180658	Shaft, Guide 17
180661	Bracket 18
180663	Scale, Range 17
180667	Plate w/Bushing 18
180668	Follower, Cam 18
180669	Locklever, Spacing 17
180671	Lever, Start 17
180672	Bail 17
180673	Plate, Front 17,18
180676	Nut, No. 6 Speed 17,19
180677	Arm, Trip 18
180678	Plate, Spring 17
180682	Upstop 10
180684	Latchlever 18
180685	Nut, 6-40 Spl 18
180688	Core, Magnet 17
180691	Plate 17
180692	Spring, Flat 17
180704	Armature 17
180710	Plate w/Post 17
180715	Coil, Magnet 17
180717	Spring 17
180718	Spring 18
180719	Spring 17
180721	Wick, Felt 17
180727	Washer, Flat 17
180728	Spring 17
180740	Bail 15
180741	Shaft, Function 16,21
180742	Roller 16
180743	Bearing, Right 16
180744	Collar 6,16
180745	Arm w/Stud 16
180746	Arm w/Bushing 11,12,16
180748	Arm w/Stud 16
180749	Arm w/Stud 16
180750	Arm w/Stud 16
180751	Arm w/Stud 16
180752	Lever, Function 16
180754	Hub 16
180755	Hub 16
180761	Ring, Retaining 16
180763	Link 23
180767	Ring, Retaining 13,15,23
180768	Ring, Retaining 11,12
180769	Link, Left 23
180770	Link, Right 23
180771	Arm 15
180772	Shaft 15
180773	Plate 15
180774	Arm, Eccentric Follower 11,12
180776	Bracket 34
180777	Arm, Drive 16
180778	Plate 15
180779	Bracket 15
180780	Blade 23
180781	Hub 15,23
180782	Shaft, Pivot 23
180783	Casting, Function Box 15
180788	Plate, Rear Rail 15,26
180789	Roller 15
180791	Arm w/Stud 15
180792	Pawl, Function 15
180793	Lever 24
180794	Lever, Line Feed 23
180795	Bracket, Spring 23
180796	Clamp 15
180797	Clamp 10,16,23

NUMERICAL INDEX (Continued)

Part Number	Description and Page Number
180798	Screw, 8-32 Self-Tapping 2,5,6,10,11,12,13,14,15, 16,19,20,23,33,34,36 to 39
180801	Lever w/Bracket 25
180806	Camsleeve 11
180807	Camsleeve 11,12
180808	Spacer, .050" Thk 11
180809	Arm 16
180813	Pawl, Function 15
180818	Lever, Function 24
180820	Lever, Control 20,34
180821	Lever w/Stud 20
180823	Block, Contact 22
180824	Contact, Common 22
180826	Lever, Detent 22
180827	Drum, Answer Back 22
180828	Pawl, Feed 20
180829	Screw, 4-40 Shoulder 20
180830	Bracket 34
180831	Lever 34
180832	Link, Tie 34
180833	Bracket, Adjusting 34
180834	Tripbail 34
180835	Pawl, AB Blocking 15
180836	Lever, Blocking Function 24
180837	Link, Blocking 20
180838	Lever, Function 24
180842	Spacer, .050" Thk 22
180843	Lever, Trip 20,22
180844	Armature 21,22,33
180847	Bracket, Spring 21,22,33
180850	Bracket, Magnet 19,21,22
180854	Brace 22
180855	Latch, Blocking 22
180858	Contact, Wire 22
180860	Spring 16,20,31
180861	Spring 20
180862	Spring 22
180863	Spring 15,20
180864	Spring, Extension 20
180865	Coil, Adjusting 34
180874	Strap, 4-1/2" Braided 34
180922	Spring 14
180923	Bracket w/Studs 14
180925	Clamp 14
180926	Ring, Retaining 14
180927	Ring, Retaining 13
180928	Bail 34
180930	Bearing 34
180932	Codebar, No.8-1 14
180933	Codebar, No.8-2 14
180934	Codebar, No.8-3 14
180935	Codebar, No.8-4 14
180936	Codebar, No.8-5 14
180937	Codebar, No.8-6 14
180938	Codebar, No.7 14
180939	Codebar, No.8 14
180947	Codebar, Spring Suppression 14
180948	Codebar, Auto CR & EOL Bell 14
180949	Bracket, Rear Tie 14
180950	Bracket, Front Tie 14,33
180956	Spring 4,14,31
180957	Bracket, Spring 14
180958	Nut, 6-40 Lug 17
180959	Bracket 17
180964	Roller 19
180967	Shaft, Distributor 19
180968	Buffer 20
180969	Bearing 19
180970	Bearing 19
180971	Shaft, Trip 20,22
180972	Clamp, Buffer 20
180973	Disc, Spacer 19
180975	Bracket w/Stud 34
180978	Lever w/Stud 34
180979	Brush, Carbon 19
180980	Holder, Brush 19
180981	Arm, Stop 20
180982	Tripbail 20
180983	Latchlever 20
180985	Lever, Follower 20
180987	Disc 19,22
180988	Bracket, Spring 20
180989	Screw, No.6 Spl 19,22
180990	Link Keyboard 34
180991	Cam, Blocking 19
180992	Spring, Torsion 19
180994	Spacer, .015" Thk 19
180995	Spacer, .114" Thk 19,21, 22
180997	Disc w/Plate 19
180998	Clamp 16,19
180999	Bearing, Left 16
181000	Drum, Clutch 11,12,18
181001	Bearing 11,12
181002	Bearing 11,12
181003	Latchlever, 13
181004	Hub 13
181005	Link, Carriage 10,11
181006	Bushing 13
181007	Shaft, Main 11,18
181008	Collar 11,12
181010	Lever w/Stud 13
181011	Lever w/Nut 13
181012	Spacer 13
181013	Spacer, .453" Thk 13
181014	Grommet, Rubber 13
181015	Gear, 35T 11,12
181017	Plate 13
181018	Shaft 13
181019	Lever, Trip 13
181020	Lever 13
181021	Spacer, .406" Thk 13
181022	Bracket, Left 11,12,13
181023	Bracket, Right 13
181028	Camsleeve 11
181030	Bracket w/Stud 2
181034	Platen 2
181037	Bracket, Right 2
181038	Bracket, Left 2,5,9
181039	Knob, Platen 2
181040	Pawl, Detent 2,4
181041	Retainer 2,4
181042	Tip, Rubber 2,3,26
181044	Roller, Pressure 3
181045	Post, Support 2,5,21
181048	Bracket, Stop 2
181049	Arm, Right 3
181050	Arm, Left 3
181051	Bracket, Left 3
181052	Plate 2,26
181053	Bail, Paper Straightener 3
181054	Shaft, Pressure 3
181055	Bar 2,3
181056	Guideplate, Pressure Roller 3
181057	Bracket, Right 3
181058	Guideplate, Paper 3
181062	Eccentric, Toggle Link 10
181065	Pawl, Check 10
181066	Shaft, Spacing Drum 6
181067	Pawl, Feed 10
181068	Lever w/Post 10

NUMERICAL INDEX (Continued)

Part Number	Description and Page Number
181069	Drum, Spacing 6
181070	Lever, Suppression 10
181071	Link 10,34
181072	Bracket w/Post 6
181074	Pulley 6
181075	Belt, 127T 6
181076	Roller 10
181077	Ratchet, Spacing 6
181078	Stud 10
181079	Washer, Flat 6
181081	Arm w/Hub and Post 34
181082	Eccentric, Toggle Link 10
181083	Lever 24
181084	Bracket 6
181085	Shaft 34
181086	Lever w/Hub 10
181088	Post 10
181089	Arm w/Hub 10
181091	Link w/Post, Toggle 10
181092	Bracket, Belt 6
181093	Bracket, Extension 6
181094	Bracket w/Post 10
181103	Cover, Base 35
181104	Clip, Cable 5,21
181109	Mount, Vibration 35
181111	Pawl, Feed 6
181113	Spring, Compression 6
181114	Lever 6
181115	Stud 6
181117	Pawl, Retaining 6
181118	Spring 6
181119	Spring 6
181120	Spring, Compression 4,6
181121	Pin 6
181122	Disc 6
181123	Nut, 4-40 Spl 6
181125	Ratchet, Left Ribbon 6
181126	Ratchet, Right Ribbon 6
181129	Ribbon w/Spool 6
181138	Pad 35
181151	Fan 36
181164	Shaft w/Link 3
181165	Pawl, Feed 3
181166	Bracket, Line Feed 3
181168	Bellcrank w/Studs 3
181172	Lever, Function 24
181173	Stud, Feed Pawl Stop 2
181174	Guide 16
181175	Plate, Stripper 3
181176	Link, Adjusting 3
181178	Bracket 34
181179	Lever, Blocking 23
181191	Spring, Compression 9
181193	Cylinder 2,5
181194	Washer, Flat 9
181195	Washer, Cup 9
181196	Ring, Retaining 9
181197	Plate, Adjusting 2,5
181198	Bumper 9
181199	Piston 9
181203	Washer, Flat 36,37
181204	Washer, Flat 2,5,36,37
181221	Pawl, Blocking Function 15
181230	Plate 10
181231	Screw, 8-32 Self-Tapping 16,21
181237	Screw, 1/4-14 Self-Tapping 35
181240	Screw w/Lockwasher, 6-40 x 3/16 Hex 2,17,23,31
181241	Screw w/Lockwasher, 6-40 X 1/4 Hex 2,8,10,12,13,15, 20,23,26,31,32,39
181242	Screw w/Lockwasher, 6-40 x 5/16 Hex 2,3,4,5,7, 17,19,20,21,31
181243	Screw w/Lockwasher, 6-40 x 3/8 Hex 6,8,21,22,31,34
181244	Screw w/Lockwasher, 6-40 x 7/16 Hex 11,12
181245	Screw w/Lockwasher, 6-40 x 1/2 Hex 2,21,34
181246	Screw w/Lockwasher, 6-40 x 5/8 Hex 13
181249	Screw w/Lockwasher, 6-40 x 1 Hex 21
181250	Screw, No.2 Self-Tapping 15
181278	Clamp 10,15
181279	Bracket 21
181284	Spring 11,12,18,19
181286	Bushing 15
181300	Sleeve, 3/16 ID x 1" Lg Insulating 40
181304	Latch 26
181305	Spring 26
181307	Lever w/Post 26
181312	Latch, Carriage Return 6
181314	Link w/Post 10
181315	Bail w/Post 34
181316	Shaft 10
181317	Hub, Carriage Return Lever 10
181318	Lever, Actuating 24
181319	Lever, Carriage Return 10
181320	Lever, Unlatch 10
181322	Pawl, Function 15
181323	Spring 8
181324	Pawl, Function 15
181325	Pawl, Function 15
181326	Arm 6
181327	Latch 6
181328	Lever 10
181383	Clamp, Motor 36,37
181384	Capacitor, 88-108 MFD 39
181386	Insulator 39
181387	Capacitor, 5 MFD 39
181392	Terminal, Tab Type 34,38
181394	Capacitor, 47-56 MFD 39
181405	Plate 13
181406	Roller 13
181407	Spring 19
181409	Belt, 47T 19
181411	Pinion, 18T 36,37
181413	Drum, Clutch 19
181414	Pulley, 34T 19
181417	Pulley w/68T Gear, 13T 36
181419	Pulley w/62T Gear, 13T 36
181420	Pulley w/54T Gear, 17T 36
181424	Nut, 6-40 Sq 6,11,12
181425	Plate 11
181426	Plate, Spacer 11
181427	Plate, Nut 11
181440	Bracket, Switch 16
181449	Plate, Contact 15
181450	Block, Contact 15
181461	Gong 15
181464	Clapper 15
181500	Link, Drive 3
181501	Upstop, Line Feed Link 3
181503	Bracket, Guide 23
181521	Spring, Platen 3
181522	Guide, Paper 3
181523	Spring 2,4
181524	Nut, 2-56 Shoulder 3
181525	Guide, Paper 3

NUMERICAL INDEX (Continued)

Part Number	Description and Page Number
181570	Lever 24
181571	Lever 24
181572	Lever 24
181573	Lever 24
181574	Lever 24
181575	Lever 23
181576	Lever 24
181580	Lever 24
181581	Lever 24
181582	Lever 24
181583	Lever 24
181585	Lever 24
181653	Diode 39
181826	Jumper, 2" Black 40
181850	Plate w/Stud 36,37
181851	Gear, 17T 36
181853	Pulley w/66T Gear, 16T 36
181854	Pulley w/60T Gear, 16T 36
181855	Pulley w/40T Gear, 16T 36
181861	Motor, 115V AC Synchronous 36,39,40
181866	Bracket 39
181867	Insulator 39
181868	Clip, Speed 39
181869	Relay, Motor Start 39
181870	Motor, 115V AC Synchronous 36,39,40
181877	Relay w/Bracket 39
181891	Sleeve, 3/16 ID x 2-1" Lg Insulating 38,40
181892	Sleeve, 9/64 ID x 1" Lg Insulating 39
181895	Sleeve, 9/64 ID x 3/8" Lg Insulating 40
181951	Insert, Nylon 35
181954	Typewheel, NJ 6
181955	Washer, Pulley 6
181956	Drum, Spacing 6
181957	Belt, 151T 6
181983	Screw, 6-40 x 5/8 Spl 15
182015	Lever Assembly Clutch Trip 1,13
182035	Pawl Assembly 15
182037	Switch Assembly, Contact 15
182047	Clutch Assembly 11,12
182056	Modification Kit 6
182068	Plate, Identification 40
182069	Plate, Identification 40
182137	Contact Assembly 21
182155	Plate, Right 7
182156	Plate, Left 7
182157	Bushing, Shoulder 7
182181	Fan 36
182182	Holder, Fuse 40
182183	Deflector, Air 36
182194	Gear, 40T 19
182195	Drum w/Bearing, Clutch 19
182232	Roller 19
182237	Pawl, Function 15
182239	Lever, Latch 20
182241	Motor, 60 Cycle Synchronous 36,39,40
182244	Lever, Cam Follower 20
182250	Foot, Rubber 35
182262	Arm, Stop 20
182263	Bracket 20
182264	Stud 20
182267	Motor, 50 Cycle Synchronous 36,39,40
182268	Lever, Cam Follower 20
182269	Modification Kit 20
182272	Resistor, 10 Ohm 39
182276	Lever, Answer-Back Trip 20,22
182277	Spring 20
182280	Typewheel, MB 27
182286	Insulator, .032" Thk 22,34
182290	Modification Kit 15,25
182291	Modification Kit 15,24
182293	Typewheel, MC 27
182310	Codebar, No.8-1 14
182311	Codebar, No.8-2 14
182312	Cpdebar, No.8-3 14
182313	Codebar, No.8-4 14
182314	Codebar, No.8-5 14
182315	Codebar, No.8-6 14
182316	Codebar, No.7 14
182317	Codebar, No.8 14
182318	Codebar R 14
182330	Codebar, No.8-A 14
182461	Bracket, Upstop 10
182531	Clip, Speed 35,36
182540	Connector, 15 Pt Plug Type 22,40
182643	Terminal, Plug Type 22, 39,40
182644	Terminal, Receptacle Type 39,40
182650	Connector, 4 Pt Plug Type 40
182677	Cable w/Terminals 22
182692	Jumper, 2-1/4" Orange 40
182693	Jumper, 1-1/4" Orange 40
182726	Terminal, Receptacle Type 38,40
182894	Link 21
182895	Plate w/Bushing 21
182898	Arm 21
182900	Link w/Post 21
182902	Spacer, .469" Thk 21
182955	Link, Support 21
182957	Plate 21
182958	Spacer 21
182960	Plate 21
182961	Sleeve 21
182964	Arm Assembly, Drive 1,21
183052	Bracket, Contact 21
183053	Stiffener, Front 21
183054	Stiffener, Rear 21
183055	Spring, Contact 21
183056	Spring, Contact 21
183057	Insulator, .031" Thk 21
183058	Insulator, .062" Thk 21
183060	Terminal, Lug 21
183062	Cover, Contact 21
183098	Lever, Trip 21
183110	Shim, .004" Thk 21,33
183111	Label 38
183126	Clip 35
183130	Insulator 21
183201	Holder Assembly, Brush 38
183202	Holder, Brush 38
183203	Spring 38
183204	Terminal 38
183205	Jumper 38
183206	Jumper 38
183207	Brush w/Terminal 38
183209	Bracket 38
183212	Governor Assembly 37
183213	Housing 37
183214	Bracket 37
183215	Bracket 37
183216	Arm, Contact 37
183217	Spring 37
183218	Screw, Spl 37

NUMERICAL INDEX (Continued)

Part Number	Description and Page Number
183219	Bracket 37
183220	Bumper 37
183221	Nut, Speed 19,37
183222	Disc 37
183223	Target 37
183301	Guideplate, Paper 4
183303	Knob, Disengaging 4
183304	Knob, Sprocket 4
183308	Plate, Right 4,5
183309	Plate, Left 4,5
183310	Platen 4
183313	Bar 4
183314	Guide, Right Paper 4
183315	Guide, Left Paper 4
183316	Bracket 4
183317	Bracket, Right 4
183318	Bracket, Left 4
183319	Detent, 21T 4
183320	Pulley, 21T 4
183321	Sprocket, Feed 4
183322	Pulley, 21T 4
183323	Bracket, Right 5
183326	Guide, Bracket 6,7
183330	Guide 6
183335	Guide, Left 4
183336	Guide, Right 4
183338	Knob w/Pin 4
183339	Plunger Assembly 4
183341	Wheel, Idler 4
183346	Ring, Retaining 4
183349	Washer, Felt 4
183351	Stud, Idler 4
183352	Guide, Paper 4
183356	Washer, Supporting 4
183357	Spring, Compression 4
183358	Plate 5
183360	Arm 16
183361	Disc 12
183364	Pulley w/20T Gear, 30T 31
183367	Pulley w/28T Gear, 21T 31
183369	Pulley w/35T Gear, 21T 31
183371	Bearing, Sleeve 12
183372	Lever, Shoe Release 12
183373	Disc, 6 Stop 12
183374	Disc, 6 Stop 12
183376	Collar 12
183377	Collar 31
183378	Belt, 41T 31
183379	Belt, 50T 31
183380	Casting, Frame 2,5,6,8, 10 to 17,19,20,22,23 32,34,36 to 39
183381	Washer, Flat 12
183382	Shaft, Main 12
183383	Pulley, 15T 12
183384	Disc 31
183385	Arm, Stop 31
183387	Pawl, Function 15
183388	Pawl, Function 15
183389	Arm 12
183390	Arm w/Stud 16
183391	Gear, 16T 31
183392	Gear, 20T 31
183393	Gear, 40T 31
183394	Gear, 20T 31
183395	Gear, 24T 31
183396	Gear, 20T 31
183397	Gear, 24T 31
183398	Gear, 44T 31
183399	Gear, 45T 31
183400	Gear, 70T 31
183401	Gear, 40T 31
183402	Gear, 51T 31
183403	Gear, 50T 31
183404	Gear, 36T 31
183405	Bail 31
183406	Bracket, Stop 31
183407	Arm 31
183408	Arm 12
183409	Arm, Latch 31
183411	Plate, Cam 31
183415	Roller 19
183418	Shaft, Distributor 19
183422	Roller 31
183423	Bracket, Spring 31
183425	Clamp 15,16,19
183426	Clamp 15
184428	Shaft 31
183429	Bail 31
183430	Arm 31
183431	Bail, Clutch Latch 31
183432	Bail, Reset 31
183433	Bracket, Side 31
183434	Bracket, Contact Switch 32
183435	Bail, Contact Switch 31
183436	Bracket 31
183437	Bracket 31,32
183438	Stud 4
183442	Lever w/Hub 4
183443	Bracket 5
183444	Contact Assembly 32
183445	Contact Assembly 5
183448	Pointer 31
183449	Plate, Index 31
183450	Screw, 4-40 x 7/32 Flat 12
183454	Retainer, Spring 4
183457	Plate 31
183458	Plate, Stop 31
183464	Post, Spring 31
183465	Spacer 31
183466	Bracket 31
183467	Insulator 31
183468	Lever, Strip 23
183469	Plate 23
183474	Modification Kit 6,7
183483	Post 32
183484	Cover, Contact 32
183492	Clutch Assembly 12
183495	Codebar 14
183496	Codebar 14
183497	Codebar 14
183498	Codebar 14,26
183499	Lever, Blocking 23
183503	Housing, Bearing 9
183504	Retainer, Bearing 9
183510	Cable Assembly 22
183545	Arm, Reverse 6
183552	Lever 24
183558	Post 14,33
183560	Lever 33
183561	Bracket, Magnet 33
183562	Bracket 34
183563	Bracket 33
183564	Bracket w/Stud 33
183565	Bar w/Link 33
183567	Bar 14
183588	Typewheel, MD 27
183599	Typewheel, ME 27
183851	Retainer, Left 23
183852	Pin 33
183853	Retainer, Right 23
183861	Plate, Stop 5
183862	Terminal 5,32
183863	Spring, Contact 5,32
183864	Spring, Contact 5,32

NUMERICAL INDEX (Continued)

Part Number	Description and Page Number
183865	Bushing, Insulating 5,32
183876	Screw, 6-32 Set 4
183877 thru 183883	Modification Kit 31
183884	Spring 31
183887	Bail, L.F. 31
183922	Typewheel 27
183991	Motor, 1/2 HP Series 37
183993	Camsleeve 11,12
183994	Link 9,10,11,12
183995	Lever 9
183996	Link, Toggle 10
183998	Clutch Assembly 11,12
183999	Spacer, .050" Thk 11,12
184006	Screw, 8-32 Self-Tapping 8,13,15,22
184055	Screw w/Lockwasher, 6-24 x 3/16 Hex 34
184056	Screw w/Lockwasher, 6-40 x 1/4 Hex 15,38
184067	Screw w/Lockwasher, 4-40 x 5/16 Hex 6
184085	Screw, 8-32 Thumb 35
184088	Spring 31
184089	Shield 32
184090	Shield 32
184096	Bracket 10
184149	Drum, Answer-Back 22
184157	Modification Kit 23
184160	Solenoid 33
184201	Lever 20
184251	Lever w/Bracket 25
184253	Lever 25
184254	Lever 25
184255	Lever 25
184256	Lever 25
184257	Lever 25
184258	Lever 25
184259	Lever 25
184280	Knob Assembly 4
184685	Typewheel, MG 27
184686	Typewheel, MH 27
184688	Typewheel, MJ 27
184689	Typewheel, MK 27
184690	Typewheel, ML 27
184691	Typewheel, MN 27
184692	Typewheel, MU 27
184693	Typewheel, MP 27
184694	Typewheel, MT 27
184695	Typewheel, MR 27
184696	Typewheel, MV 27
184697	Typewheel, MW 27
184698	Typewheel, MY 27
184950	Typewheel, MS 27
184951	Typewheel, MZ 27
184952	Typewheel, NA 28
184953	Typewheel, NB 28
184954	Typewheel, HC 28
184955	Typewheel, ND 28
184956	Typewheel, NE 28
184957	Typewheel, NF 28
184958	Typewheel, NG 28
184959	Typewheel, NH 28
184960	Typewheel, NK 28
184961	Typewheel, NL 28
184962	Typewheel, NM 28
184963	Typewheel, NP 28
184964	Typewheel, NR 28
184965	Typewheel, NS 28
184966	Typewheel, NT 28
184967	Typewheel, NU 28
184968	Typewheel, NV 28
184969	Typewheel, NW 28
184970	Typewheel, NX 28
184971	Typewheel, NY 28
184972	Typewheel, NZ 28
184973	Typewheel, PA 28
184974	Typewheel, PB 29
184975	Typewheel, PC 29
184976	Typewheel, PD 29
184977	Typewheel, PE 29
184978	Typewheel, PF 29
184979	Typewheel, PG 29
184980	Typewheel, PH 29
184981	Typewheel, PJ 29
184982	Typewheel, PL 29
184983	Typewheel, PM 29
184984	Typewheel, PN 29
184985	Typewheel, PR 29
184986	Typewheel, PT 29
184987	Typewheel, PW 29
184988	Typewheel, PX 29
184989	Typewheel, PY 29
184990	Typewheel, PZ 29
184991	Typewheel, RA 29
184993	Typewheel, RC 30
184994	Typewheel, RD 30
184996	Typewheel, RF 30
184998	Typewheel, RH 30
184999	Typewheel, RJ 30
185000	Typewheel, RL 30
185484	Typewheel, SB 30
185676	Terminal, Plug Type 21, 22,39,40
185677	Terminal, Receptacle Type 39,40
185680	Plate, Identification 40
185700	Base 35
185708	Screw, 8-32 x 3/8 Hex 2,36, 37
185721	Bracket, Fuse 40
185730	Modification Kit 40
185731	Jumper, 3-3/4" Black 32
185732	Bracket, Fuse 40
185733	Insulator 39,40
185734	Fuse, SL-BL 2-1/4 Amp 40
185736	Bracket, Spring 10
185755	Spring 33
185775	Extension, Armature 21 22,33
185788	Arm 2,26
185789	Stud 2,26
185790	Plate, Detent 2,26
185791	Modification Kit 1,26
185796	Bracket 2
185799	Shaft 6
185815	Screw, 6-40 x 5/16 Spl 2
185834	Plate, Identification 40
185871	Screw w/Lockwasher, 8-32 x 3/8 Hex 34,35
185877	Platen 2,26
185945	Insulator 5
185968	Latch 26
185969	Hub 26
185970	Lever w/Post 26
185971	Modification Kit 1,26
185975	Guidepost 6
185980	Retainer 33
185984	Lever 24
185985	Lever 24
185986	Post 8,26
185987	Roller 8,26
185989	Collar 4
185990	Platen 4
185993	Arm, Latch 32
185994	Arm w/Hub 32

NUMERICAL INDEX (Continued)

Part Number	Description and Page Number
185996	Spacer 32
185997	Plate, Stop 32
185998	Plate 39
185999	Arm, Stop 32
186009	Insulator 39
186010	Bracket 39
186011	Bracket 40
186014	Bracket, Contact 17
186025	Contact Assembly 17
186042	Set of Parts 19
186052	Spacer, .183" Thk 19
186053	Nut, Speed 19
186070	Typewheel, PS 29
186175	Bracket 6
186213	Hub 16
186214	Washer, Spl 16
186218	Bearing, Roller 9
186240	Set of Parts 16
186247	Shaft 11
186248	Shaft 12
186249	Cam, Selector 18
186253	Lever w/Hub 20
186254	Lever, Cam Follower 20,34
186257	Clamp 20
186259	Clamp, Bearing 16
186261	Link 34
186262	Shaft, Trip Pivot 20,22
186264	Lever w/Stud 34
186265	Buffer 20
186268	Shaft, Distributor 19
186271	Shaft, Distributor 19
186313	Lever 24
186401	Clutch Assembly 18
186412	Arm 16
186413	Arm 16
186432	Guideplate 7
186442	Piston 9
186443	Bumper 9
186445	Cover, Contact 17
186446	Lever, Blocking 17
186447	Lever, Blocking 17
186448	Timer Assembly 39
186460	Pinion, 19T 36
186462	Pulley w/64T Gear, 13T 36
186465	Timer Assembly 39
186468	Lever 24
186536	Set of Parts 9
186538	Pulley w/52T Gear 36
186539	Gear 36
186555	Timer, Elapsed 39
186556	Timer Assembly, Elapsed 39
186557	Bracket 15
186575	Arm 11,12,16
186576	Arm 16
186583	Plate 39
186584	Timer Assembly 39
186585	Timer Assembly 39
186604	Bracket 15
186606	Set of Parts 4
186608	Lever 25
186609	Lever 25
186610	Lever 25
186611	Lever 25
186639	Sleeve, 7/16 ID x 1-1/2" Lg Insulating 40
186642	Knob 18
186664	Post 34
186665	Set of Parts 2
186668	Sleeve 21
186669	Spring 18,24,25
186691	Insert 35
186692	Post, Eccentric 10
186693	Lever 10
186694	Lever 10
186728	Modification Kit 10
186731	Ring, Compression 13
186732	Line 7
186733	Insulator 35
186734	Insulator 17
186738	Insulator 35
186745	Cylinder 2,5
186747	Bracket 31
186748	Spacer 31
186755	Screw, 8-32 Self-Tapping 21
186770	Shaft 14
186774	Handle 34
186775	Clamp 34
186776	Modification Kit 34
186778	Screw, 6-40 x 7/32 Hex 18
186781	Clip, Function Lever 14
186782	Clip, Function Lever 14
186783	Clip, Extension 14
186796	Lever, Function 24
186798	Pawl 15
186802	Pawl, Function 15
186803	Clip, Extension 14
186836	Guard, Motor 36
186873	Plate, Stop 21
187000	Screw, Self-Tapping 17
187076	Plate 3
187077	Link w/Post 3
187078	Upstop 3
187096	Plate 4,31
187097	Stud 4
187098	Wheel, Idler 4
187099	Eccentric 4
187100	Washer, Flat 4
187103	Bracket 15
187126	Stud 19
187196 thru 187203	Clip Extension 14
187244	Bar 16
187251	Plate 3
187269	Spring 22
188059	Plate 3
188328	Arm w/Hub 10
188406	Switch 16
188407	Spring, Contact 32
188408	Spring, Contact 32
188409	Contact Assembly 32
189019	Bracket 3
189023	Bellcrank 3
189024	Plate w/Stud 3
192007	Terminal, Tab Type 38,40
193476	Jumper, 2-3/4" Black 40
194956	Spring 12
194987	Screw, 8-32 x 3/8 Hex 2, 3,5,16
195614	Pin, Key 40
196932	Sleeve, 7/16 ID x 1-1/4" Lg Insulating 40
197464	Diode 15
198670	Screw w/Lockwasher, 6-40 x 5/16 Hex 2,4,5,10,38
199440	Screw, 5-40 x 4/8 Fil 11, 12
312918	Strap 36,40
312919	Strap, Cable 40
312920	Strap, Cable 40
315756	Plate, Identification 36
320246	Fuse, SL-BL 1.8 Amp 40

NUMERICAL INDEX (Continued)

Part Number	Description and Page Number	Part Number	Description and Page Number	Part Number	Description and Page Number
320410	Terminal, Spade Type 39	327323	Ring, Retaining 16,20,34	333521	Motor Assembly 1,37,38
320411	Terminal, Spade Type 34	328727	Connector, 15 Pt Plug	334874	Nut, 1/4-28 Hex 38
320423	Plate 39		Type 40	336468	Triac 38
323094	Diode 39	332696	Bracket 38	340699	Clip, Cable 35
324499	Terminal 39,40	333519	Jumper 38		

33 CALL CONTROL UNIT (UCC)

PARTS

FIGURE	CONTENTS	PAGE
1	Base Plate Components for use With Rotary Dial	2
2	Base Plate Components for use With Touch-Tone or Card Dialing	3
3	Electrical Components for use With Rotary Dial	4
4	Electrical Components for use With Rotary Dial (Continued)	5
5	Electrical Components for use With Touch-Tone or Card Dialing	6
6	Base Plate and Electrical Components for DC Signal Private Line	7
7	Base Plate and Electrical Components for DC Signal Private Line (Continued)	8
8	Electrical Components for Computer Control Private Line	9
9	Base Plate and Electrical Components for use With Station Controller	10
10	Base Plate and Electrical Components for use With Station Controller (Continued)	11
11	Base Plate and Electrical Components	12
12	Base Plate and Electrical Components (Continued)	13
13	186627 Set Interface Logic Assembly	14
14	186630 Modification Kit to Provide Break Detection and Indication	15
15	Alarms and Speaker	16
16	181815, 182695, 186000 and 332709 Selector Magnet Driver Assemblies	17
17	Receive-Only Bracket Components	18
18	182489, 193487, 186600 and 186601 Dial Modifications	19
19	186602 and 186603 Dial Modifications	20
20	193486, 193489, 195924, 195926 and 327420 Dial Modifications	21
21	Key Assemblies	22
22	Power Cords and Jumpers	23
23	Cable Components	24
24	186670 Modification Kit to Provide Private Line	25
25	Base Plate and Electrical Components for Private Wire Service	26
26	Call Control w/Modem-Logic Cards	27
27	188865 Power Supply Assembly	28
28	188865 Power Supply Assembly (Continued)	29
29	187133 (Manual) and 187134 (Automatic Reader Card Set of Parts)	30
30	186765 (Manual), 186766 (Automatic) 184194 and 186480 Reader Power Pack Assemblies	30
31	181720 Power Pack Assembly	31
32	182134 and 182149 Reader Power Pack Assembly	32
33	187156 Modification Kit To Add 20/60 MA DC Interface	32
	Numerical Index	33

© 1965,1970 and 1972 by Teletype Corporation
All rights reserved
Printed in U.S.A.

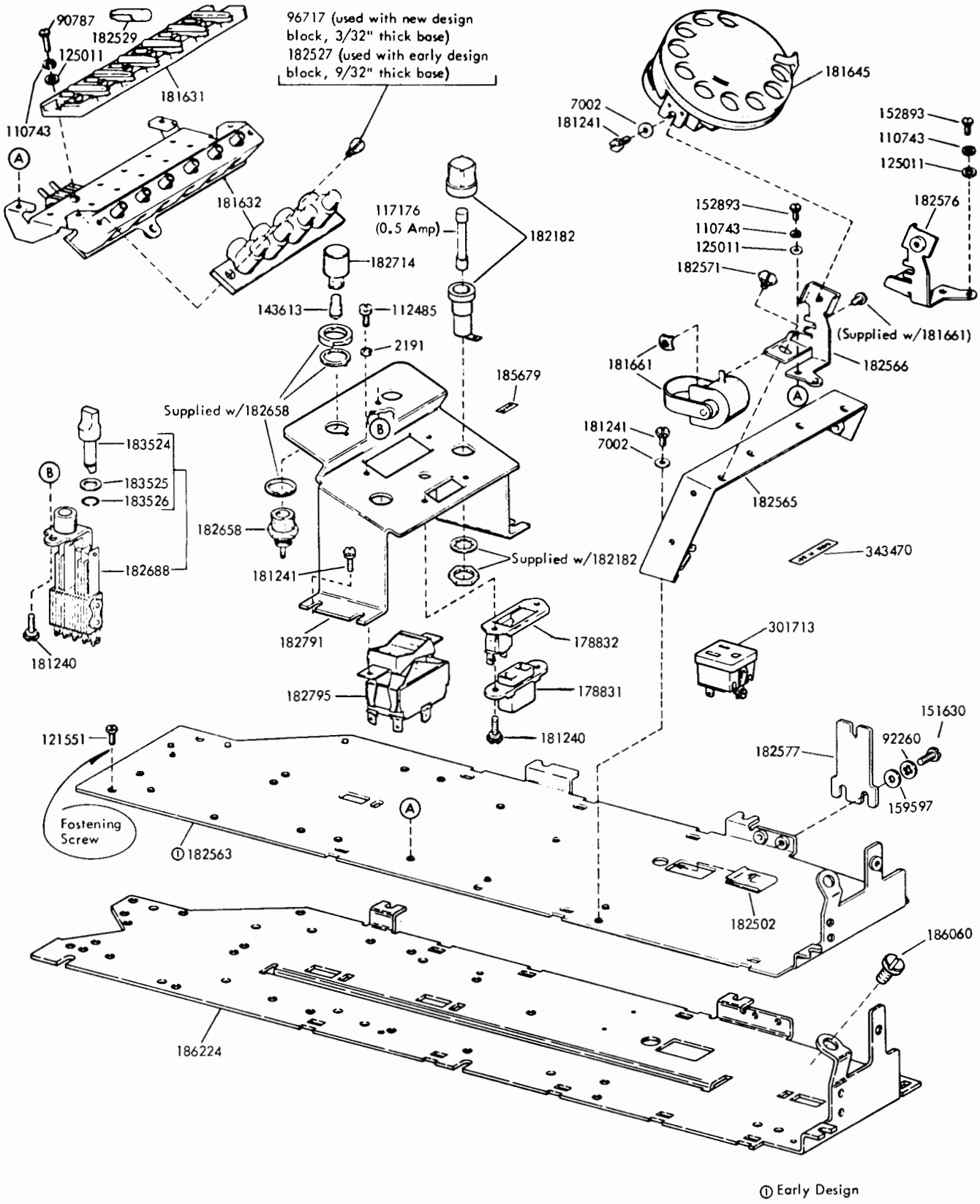

FIGURE 1. BASE PLATE COMPONENTS FOR USE WITH ROTARY DIAL

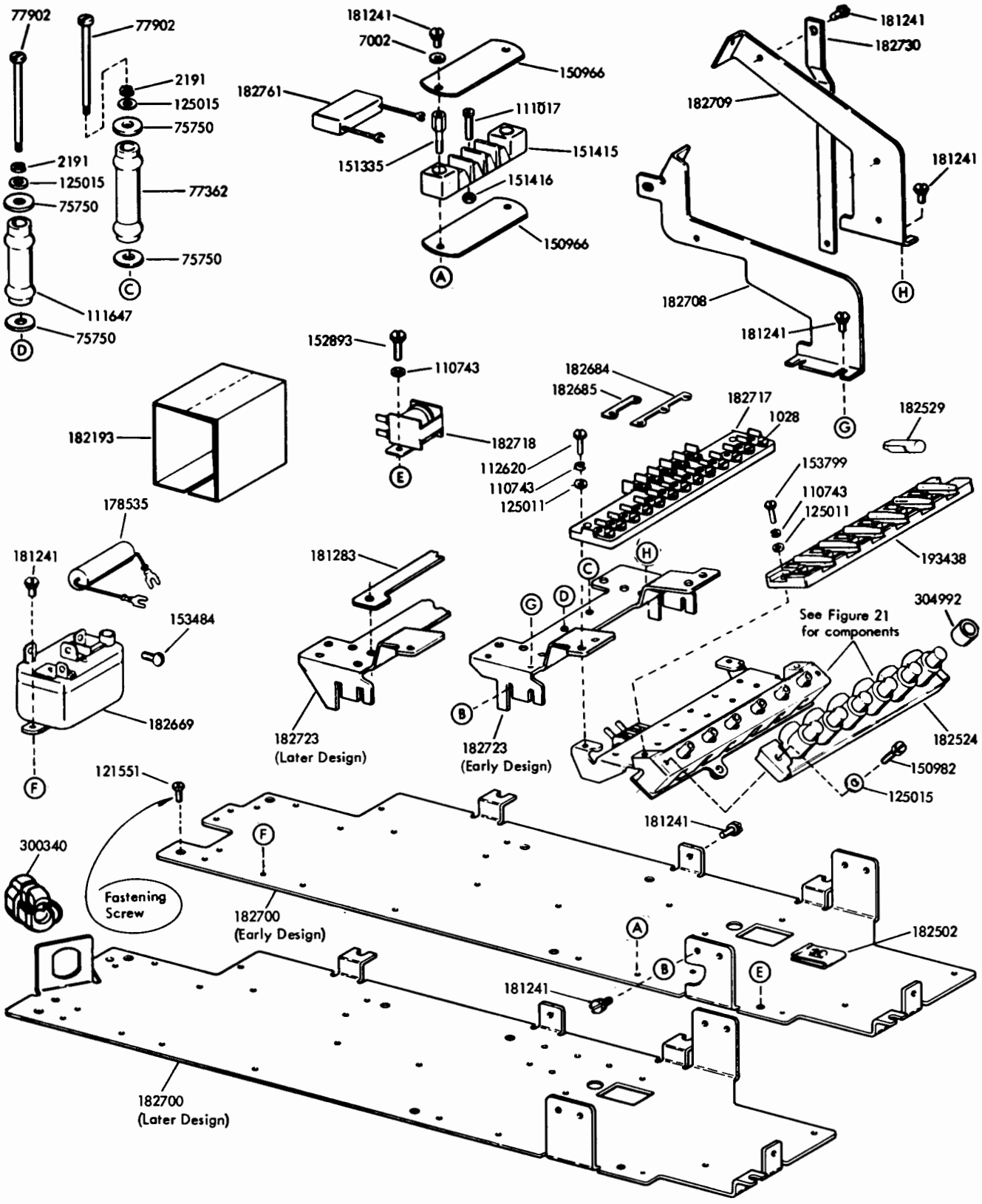

FIGURE 2. BASE PLATE COMPONENTS FOR USE WITH TOUCH-TONE OR CARD DIALING

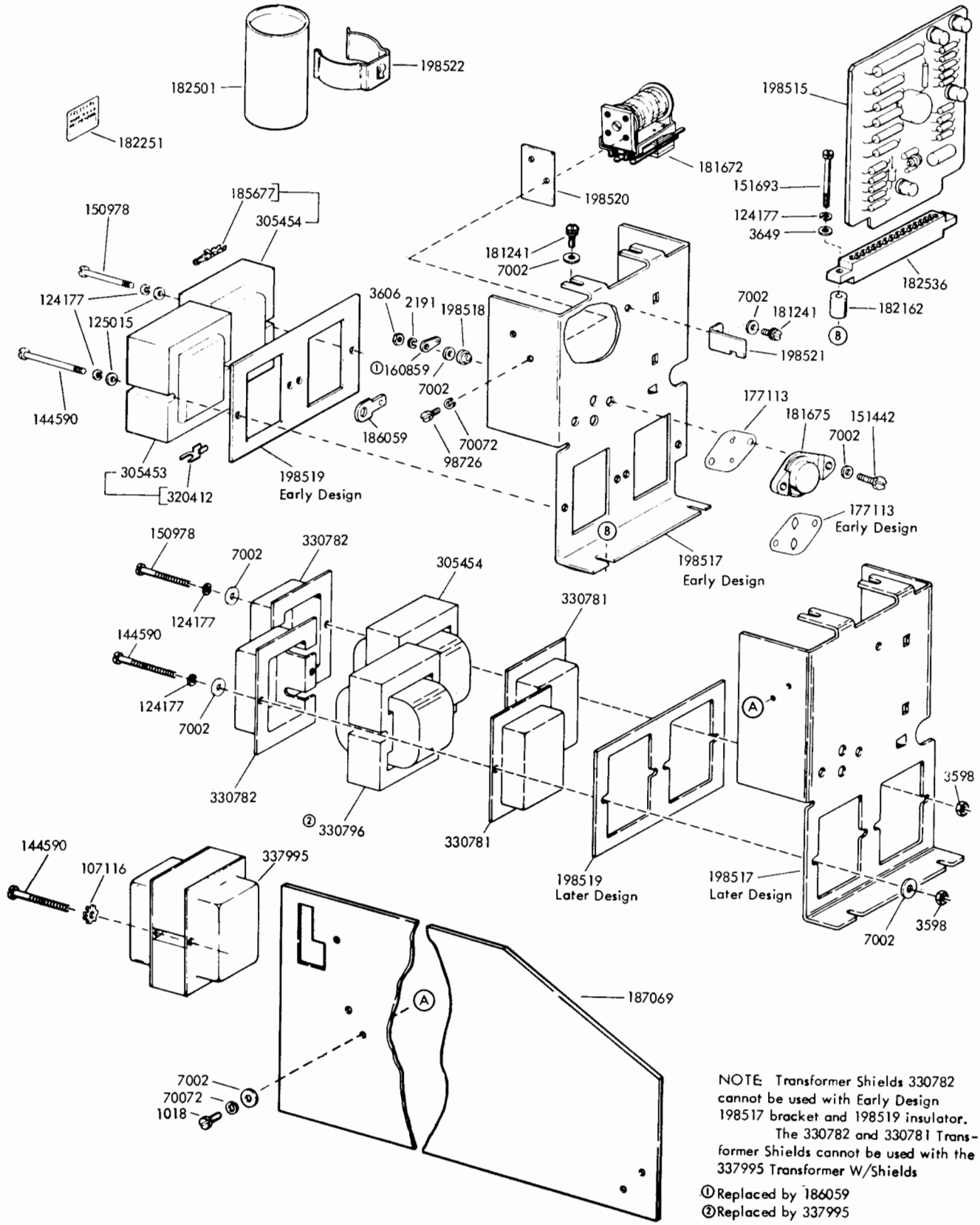

FIGURE 3. ELECTRICAL COMPONENTS FOR USE WITH ROTARY DIAL

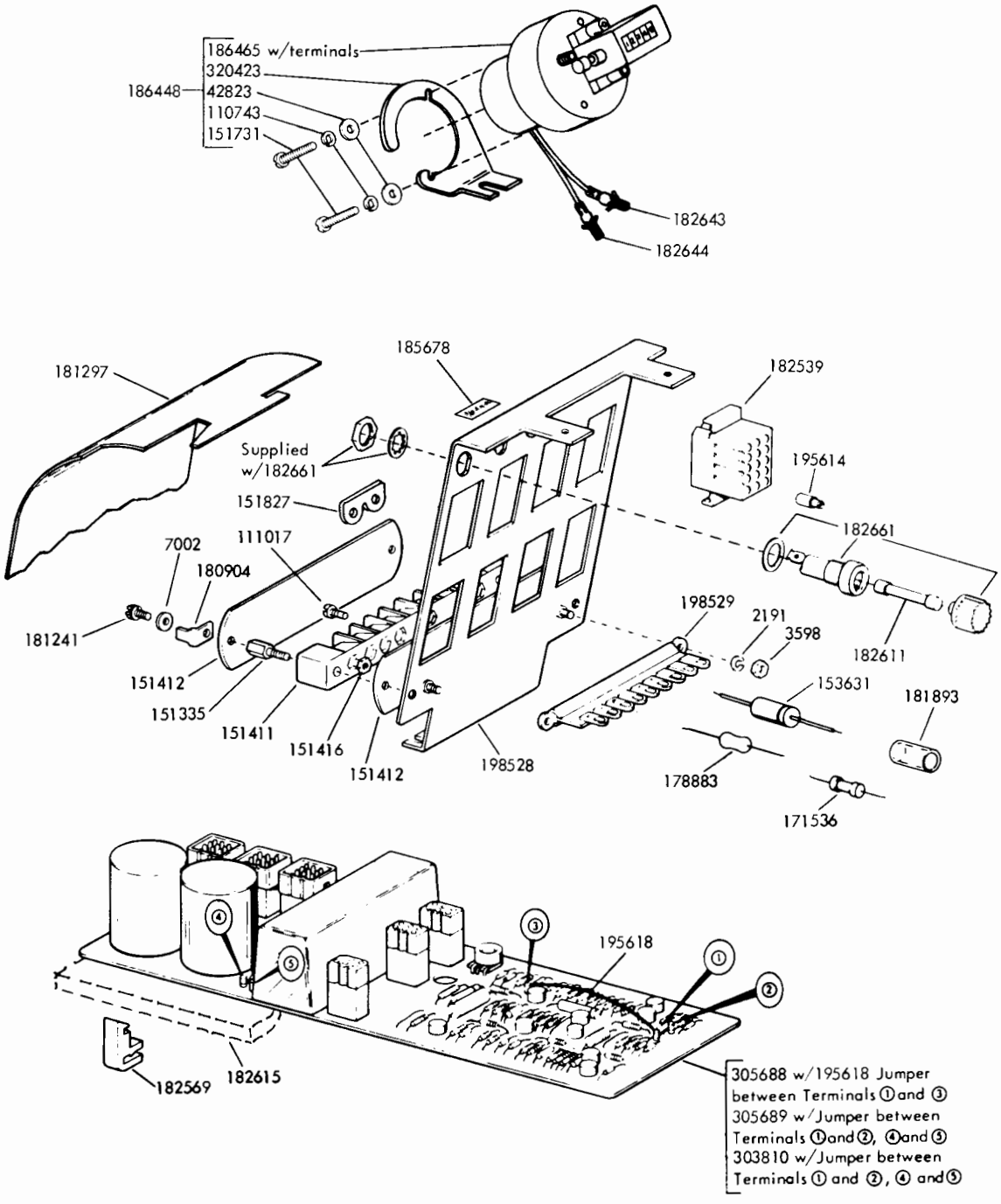

FIGURE 4. ELECTRICAL COMPONENTS FOR USE WITH ROTARY DIAL (Continued)

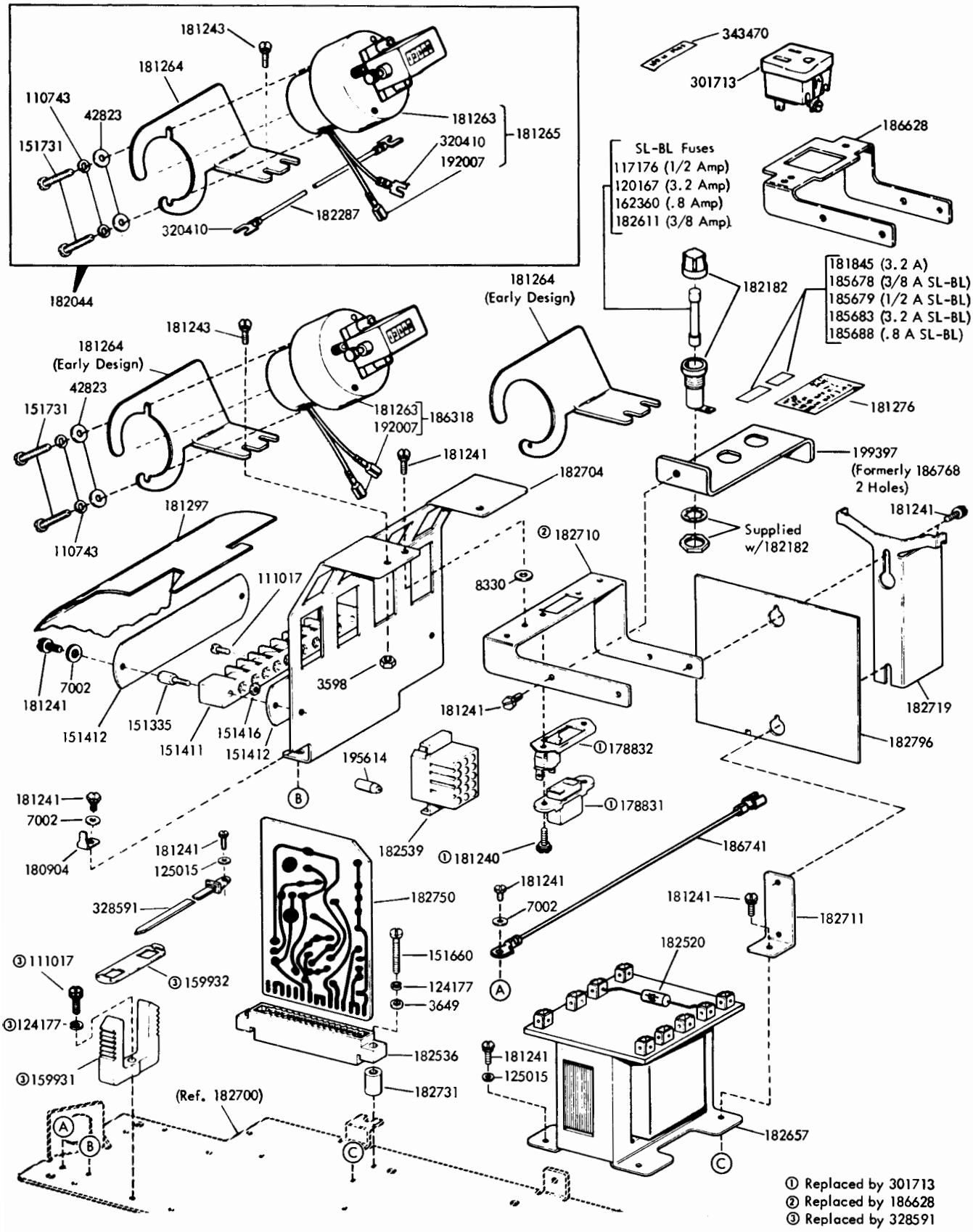

FIGURE 5. ELECTRICAL COMPONENTS FOR USE WITH TOUCH-TONE OR CARD DIALING

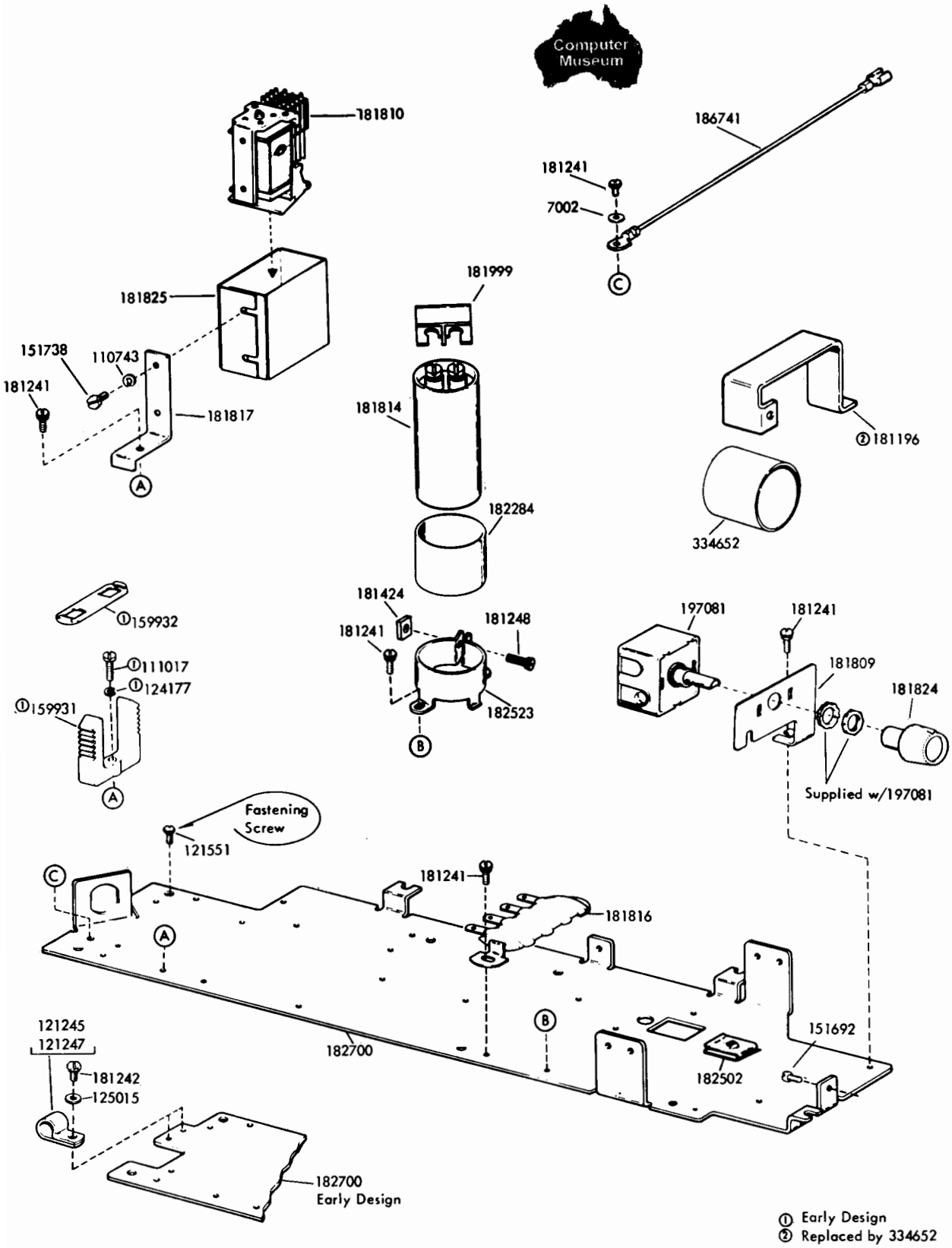

FIGURE 6. BASE PLATE AND ELECTRICAL COMPONENTS FOR DC SIGNAL PRIVATE LINE

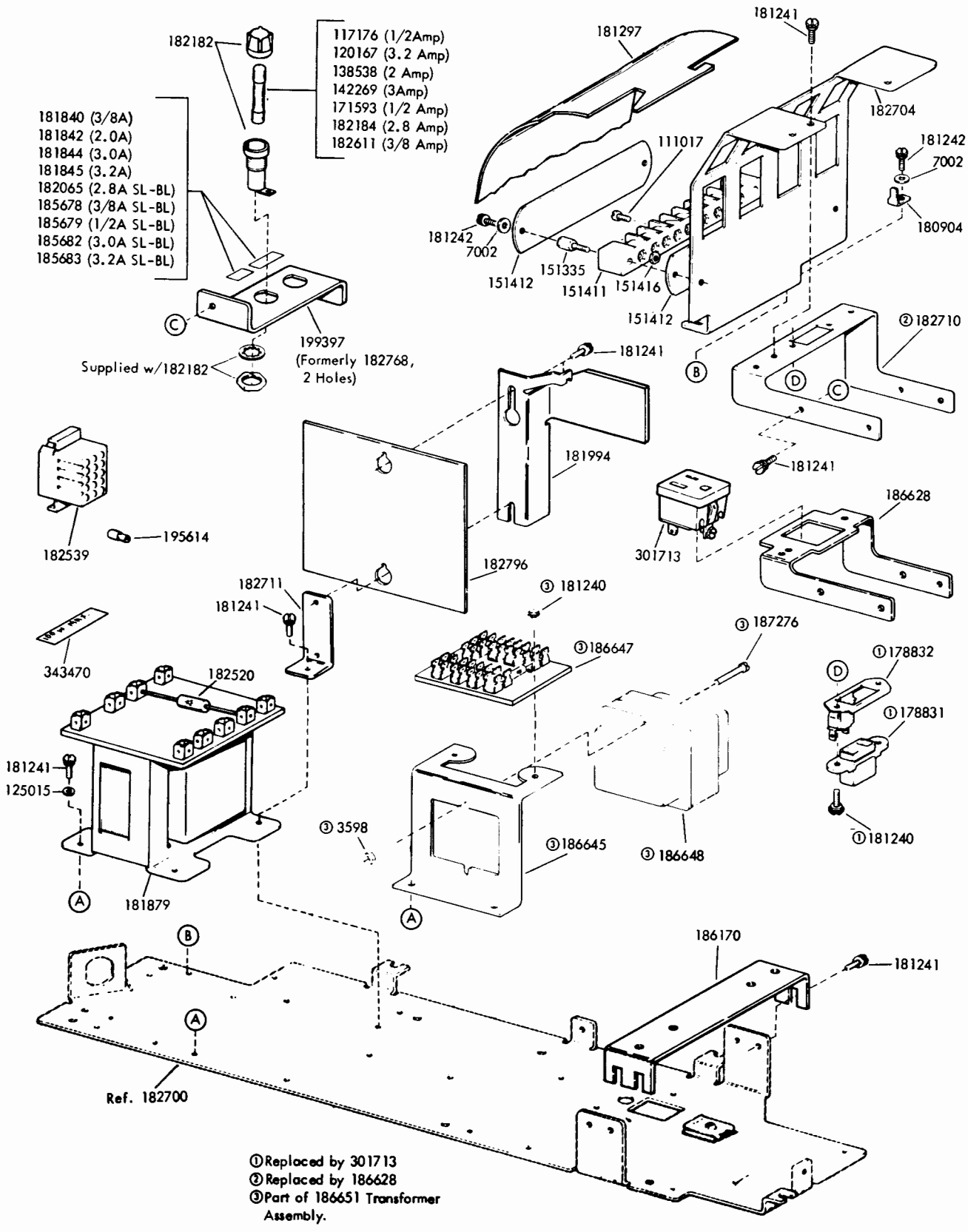

FIGURE 7. BASE PLATE AND ELECTRICAL COMPONENTS FOR D.C. PRIVATE LINE (Continued)

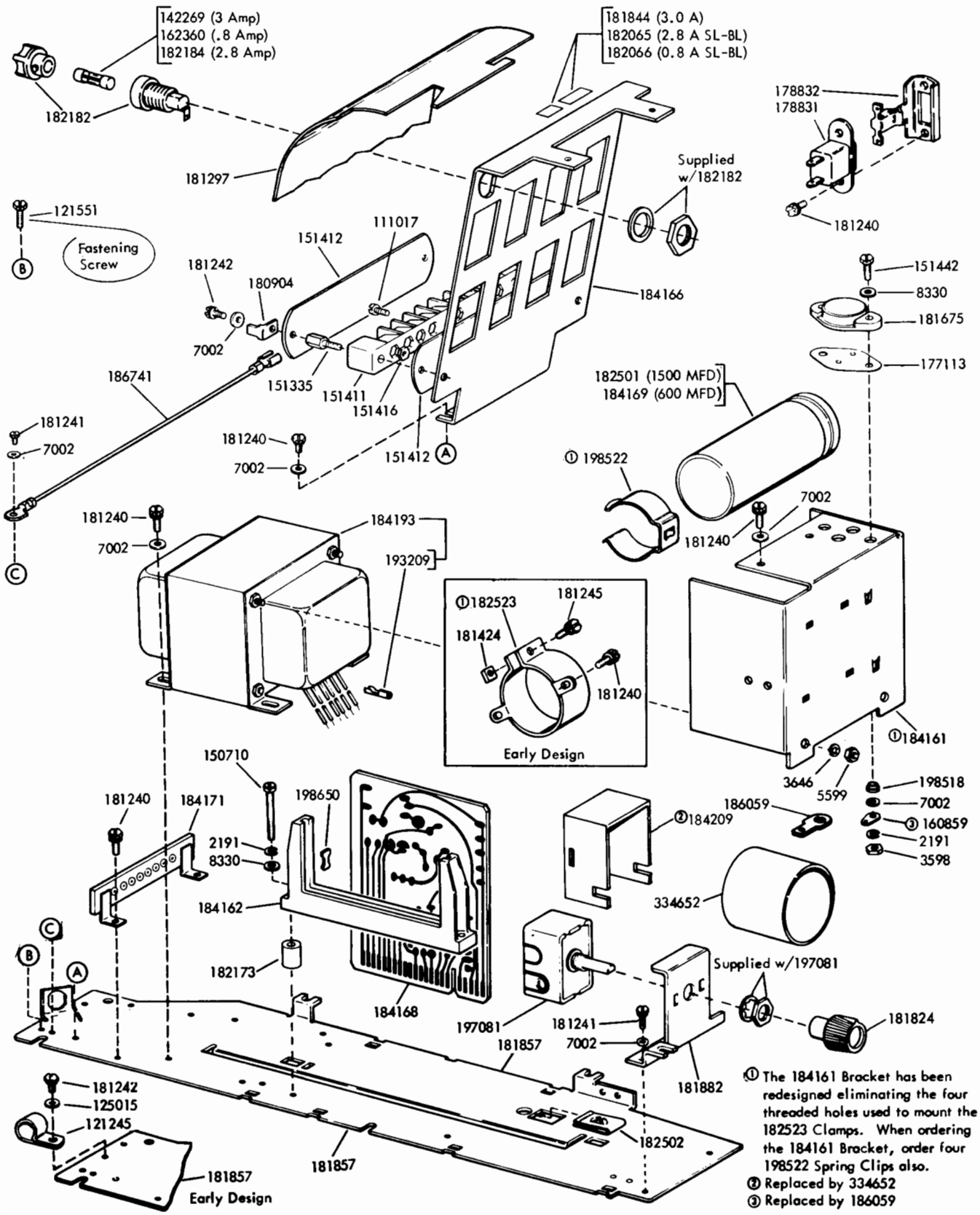

FIGURE 8. ELECTRICAL COMPONENTS FOR COMPUTER CONTROL PRIVATE LINE

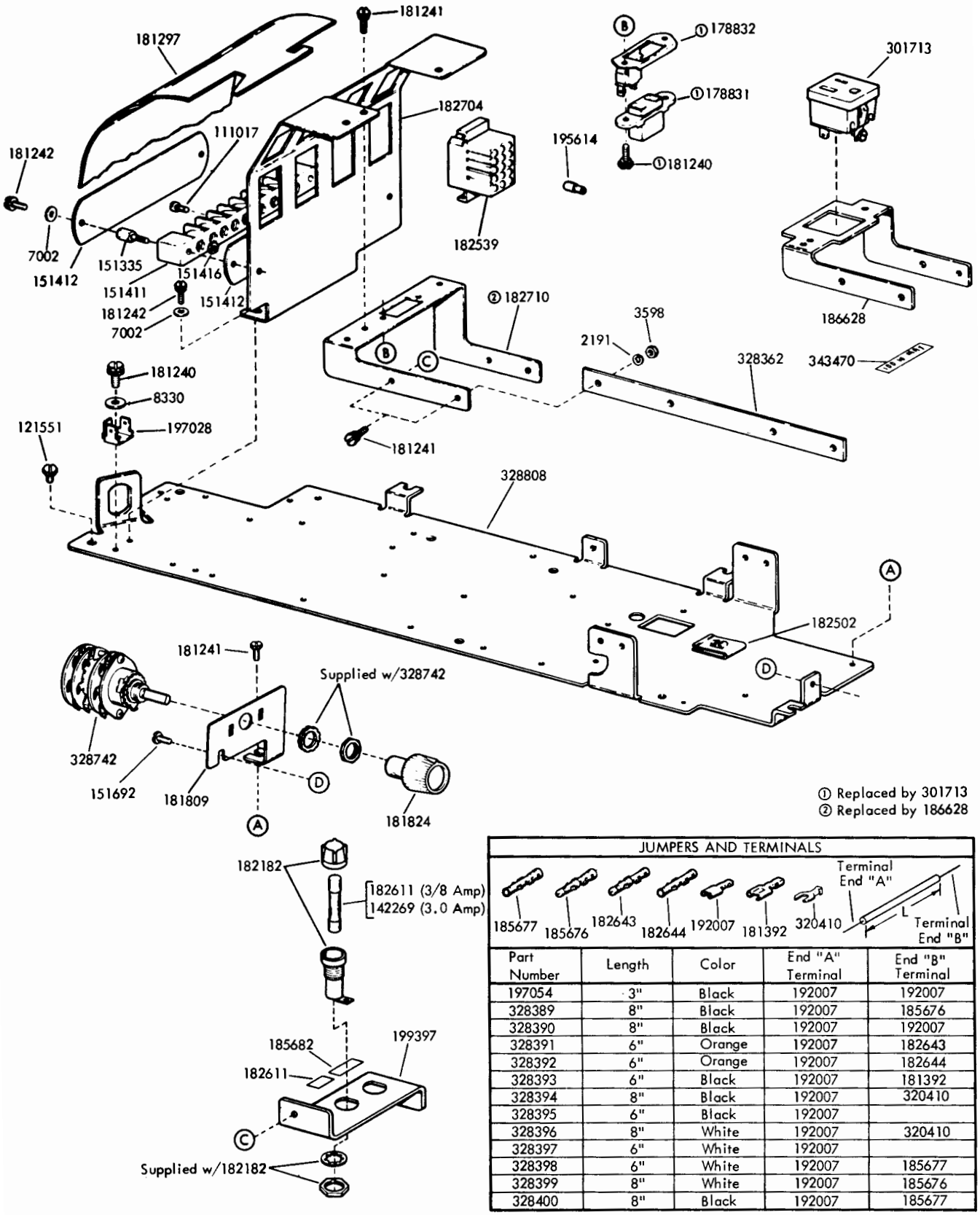

① Replaced by 301713
② Replaced by 186628

JUMPERS AND TERMINALS

Part Number	Length	Color	End "A" Terminal	End "B" Terminal
197054	3"	Black	192007	192007
328389	8"	Black	192007	185676
328390	8"	Black	192007	192007
328391	6"	Orange	192007	182643
328392	6"	Orange	192007	182644
328393	6"	Black	192007	181392
328394	8"	Black	192007	320410
328395	6"	Black	192007	
328396	8"	White	192007	320410
328397	6"	White	192007	
328398	6"	White	192007	185677
328399	8"	White	192007	185676
328400	8"	Black	192007	185677

FIGURE 9. BASE PLATE AND ELECTRICAL COMPONENTS FOR USE WITH STATION CONTROLLERS

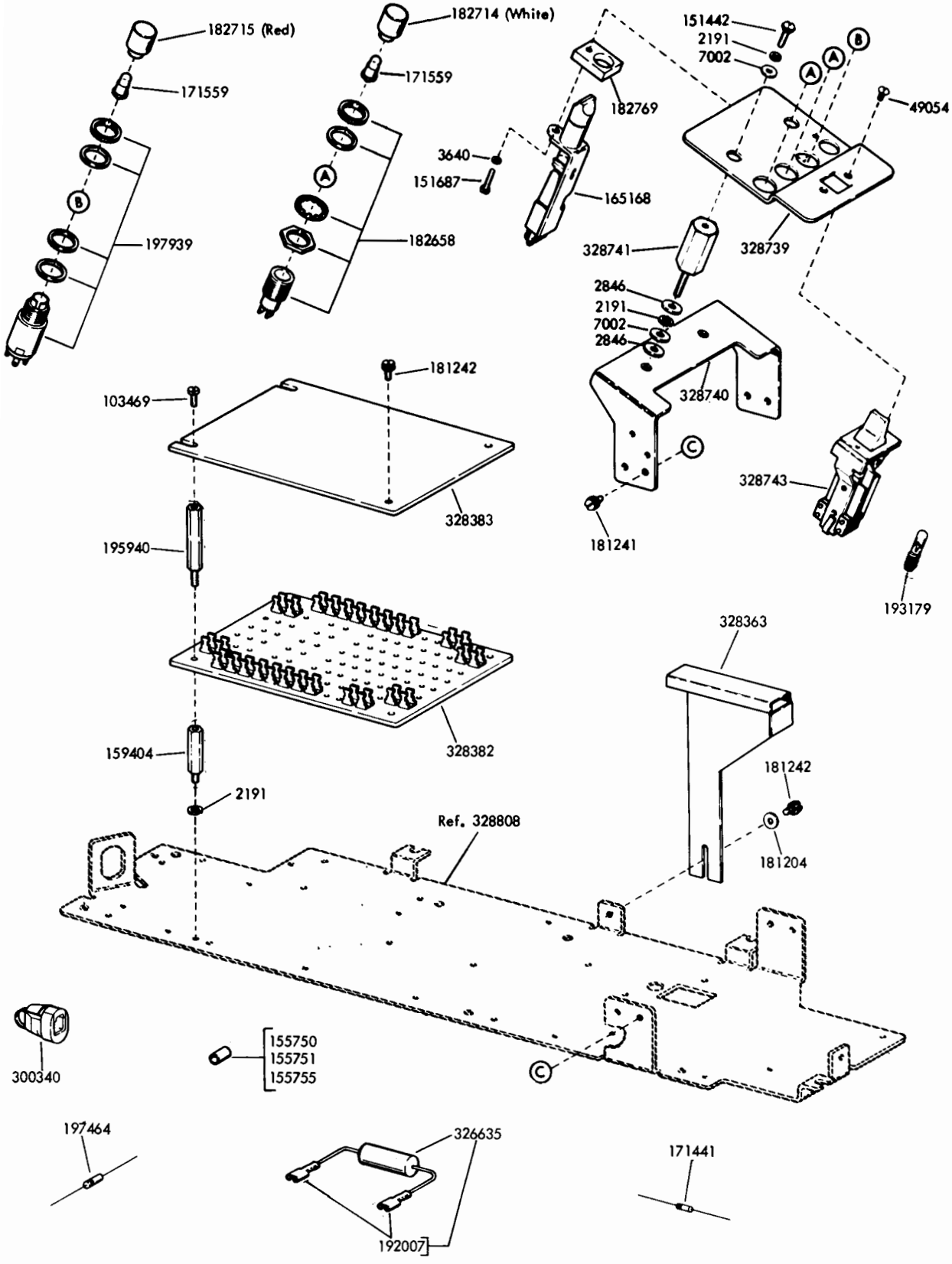

FIGURE 10. BASE PLATE AND ELECTRICAL COMPONENTS FOR USE WITH STATION CONTROLLER (Continued)

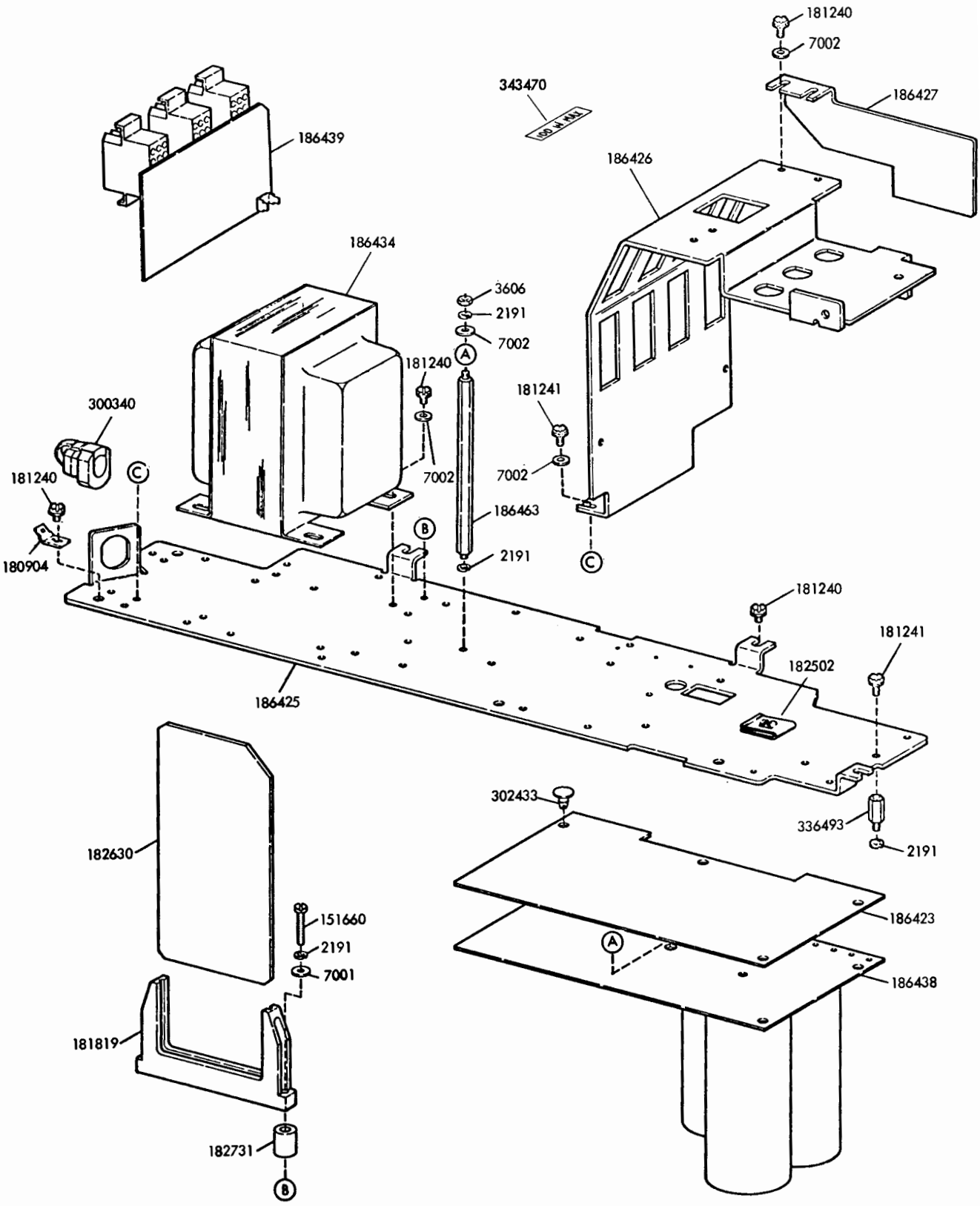

FIGURE 11. BASE PLATE AND ELECTRICAL COMPONENTS

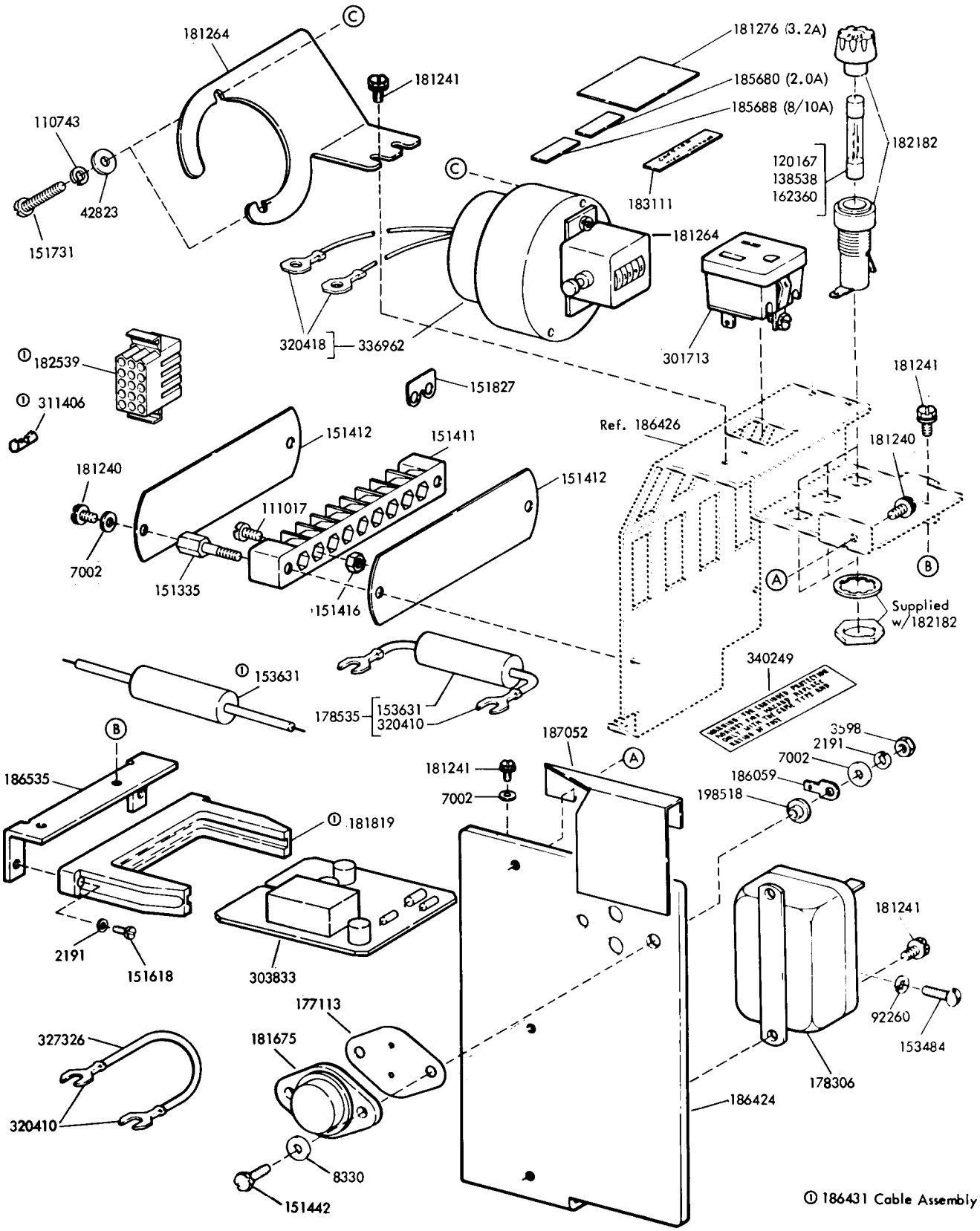

FIGURE 12. BASE PLATE AND ELECTRICAL COMPONENTS (Continued)

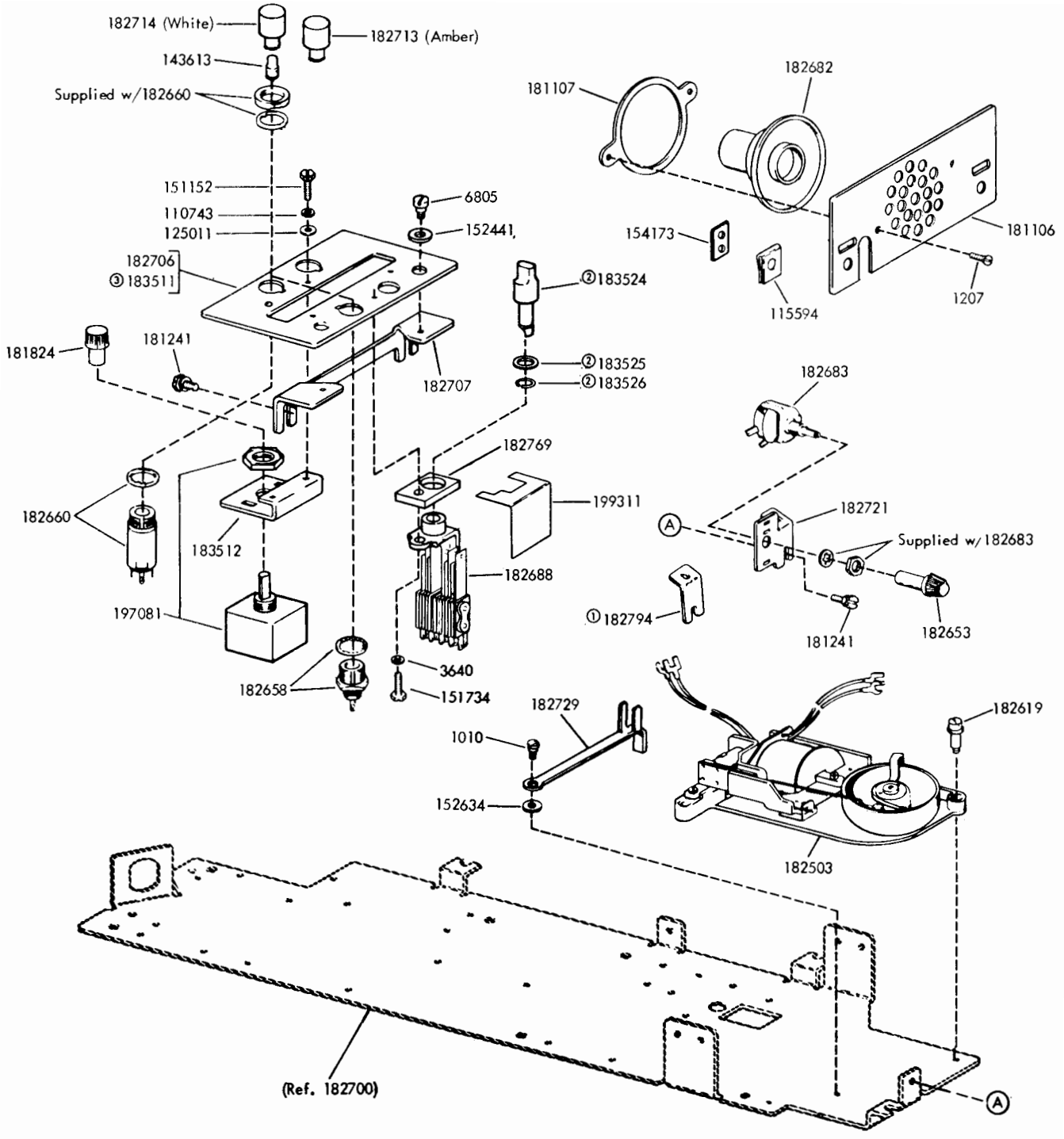

①No longer available. Replaced by 182721
②Part of 182688
③Accepts the 183512 Bracket and Switch

FIGURE 15. ALARMS AND SPEAKER

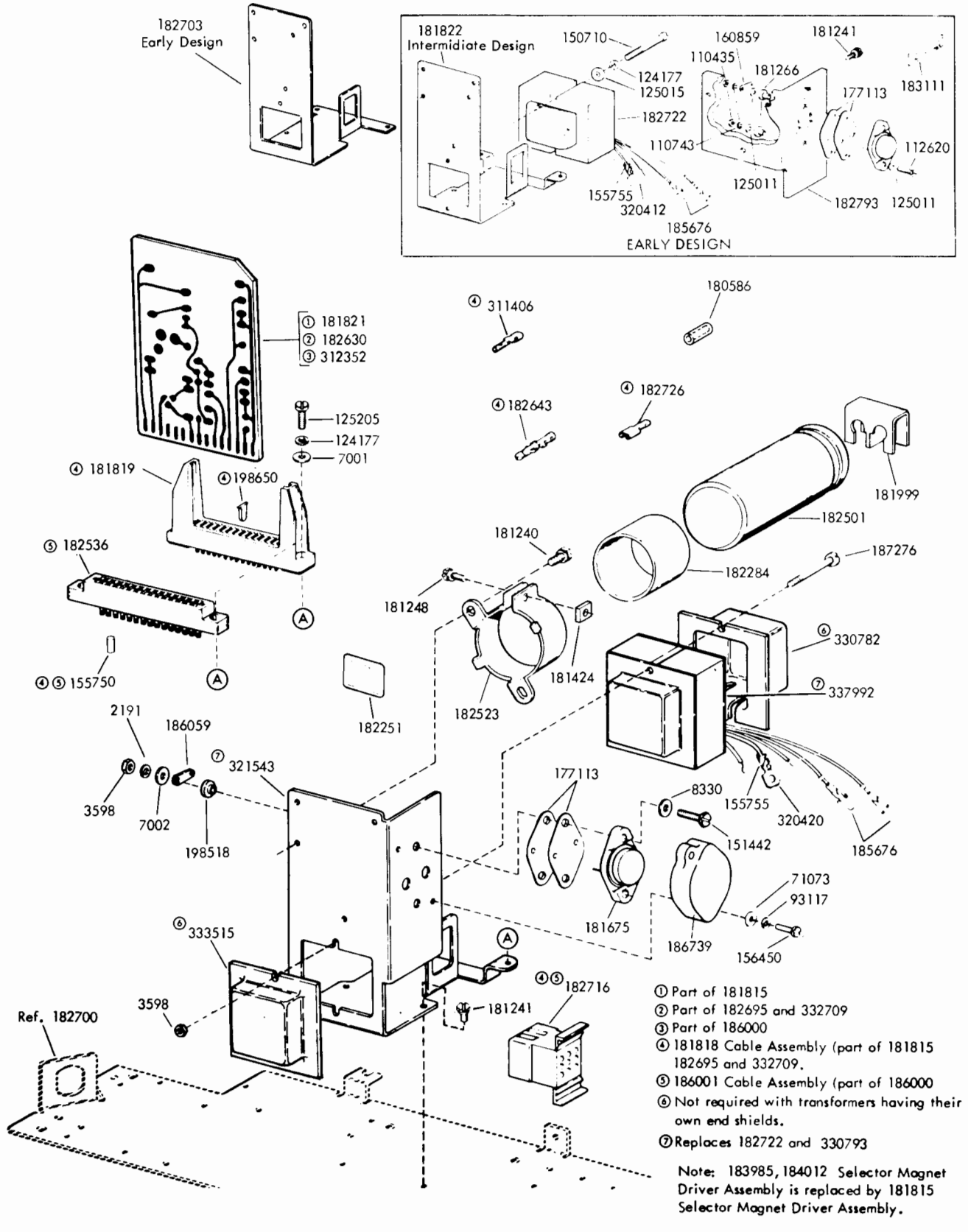

FIGURE 16. 181815, 182695, 186000 AND 332709 SELECTOR MAGNET DRIVER ASSEMBLIES

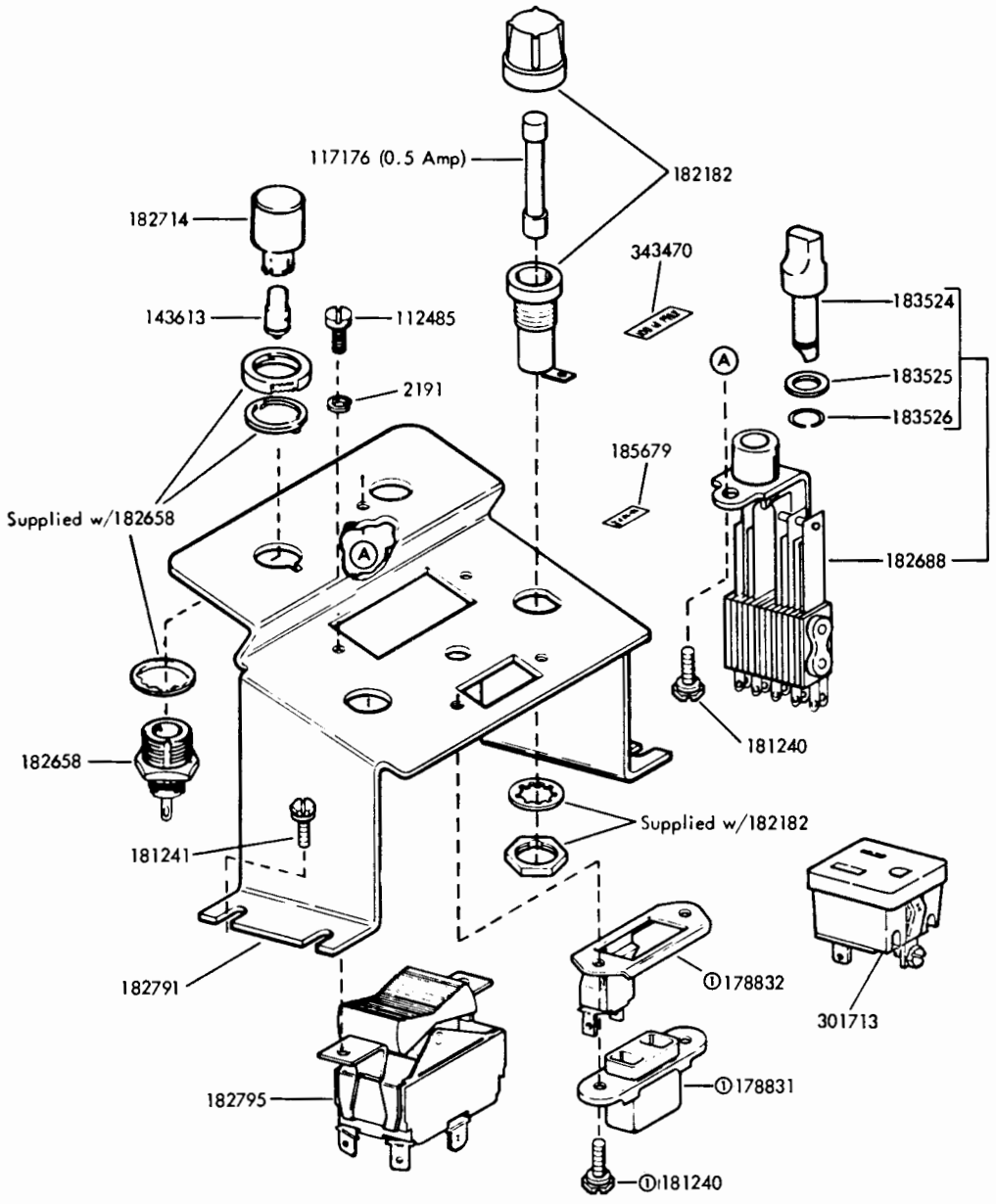

① Replaced by 301713

FIGURE 17. RECEIVE-ONLY BRACKET COMPONENTS

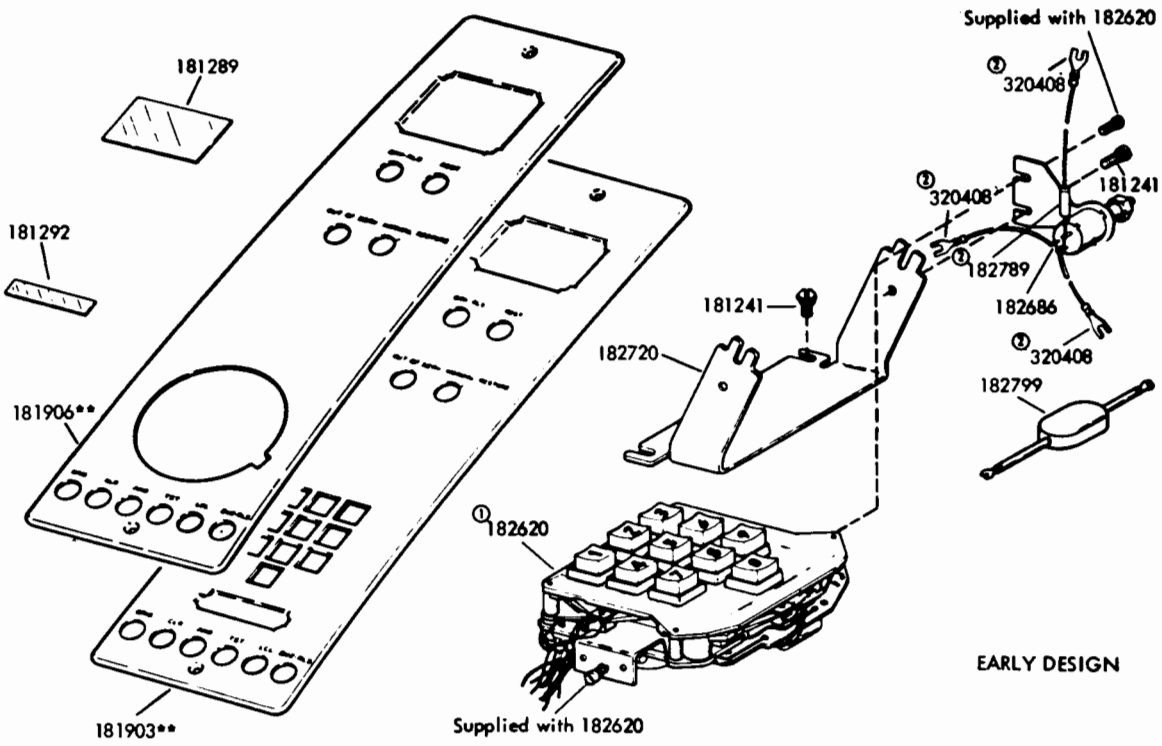

Manual 10-button TOUCH-TONE dial

Part of 182489 (less Dialer) and 193487 (with Dioler) Modification Kits (Specification 50156S)

① Peculiar to 193487
② Part of 182686
③ Peculiar to 182489

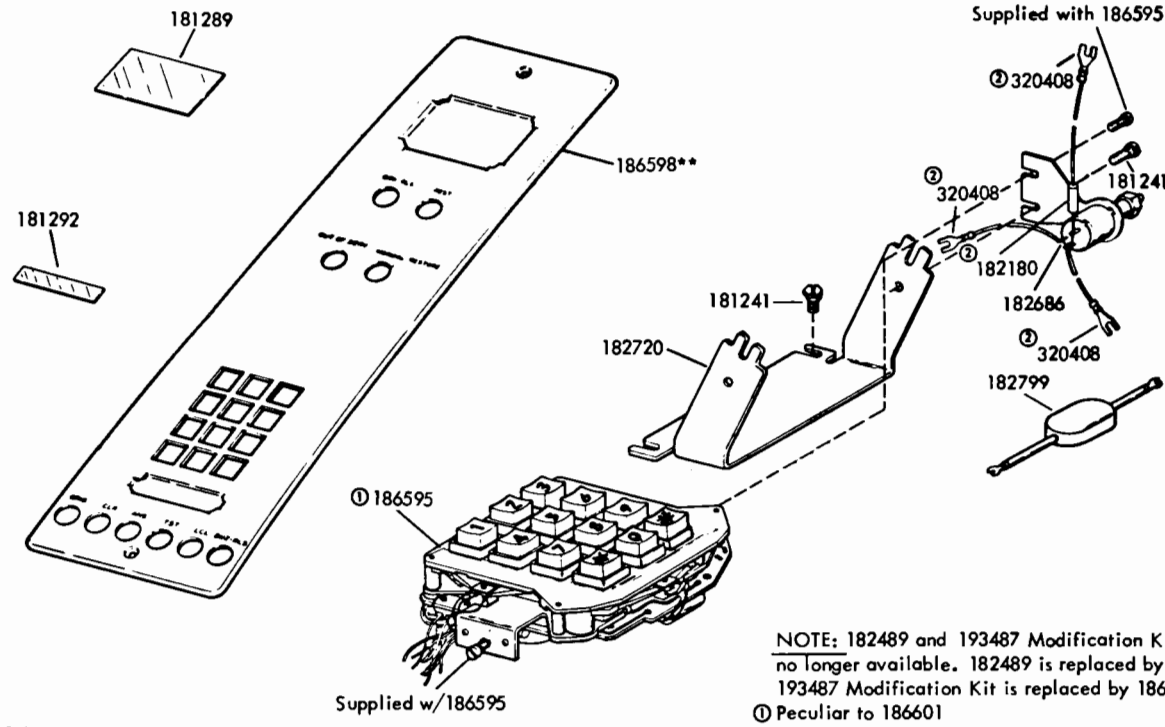

NOTE: 182489 and 193487 Modification Kits are no longer available. 182489 is replaced by 186600. 193487 Modification Kit is replaced by 186601.

① Peculiar to 186601
② Part of 182686
** Refer to page 1 for finish suffix

Manual 12-button TOUCH-TONE dial

Part of 186600 (less Dialer) and 186601 (with Dialer) Modification Kits (Specification 50156S)

FIGURE 18. 182489, 193487, 186600 AND 186601 DIAL MODIFICATIONS

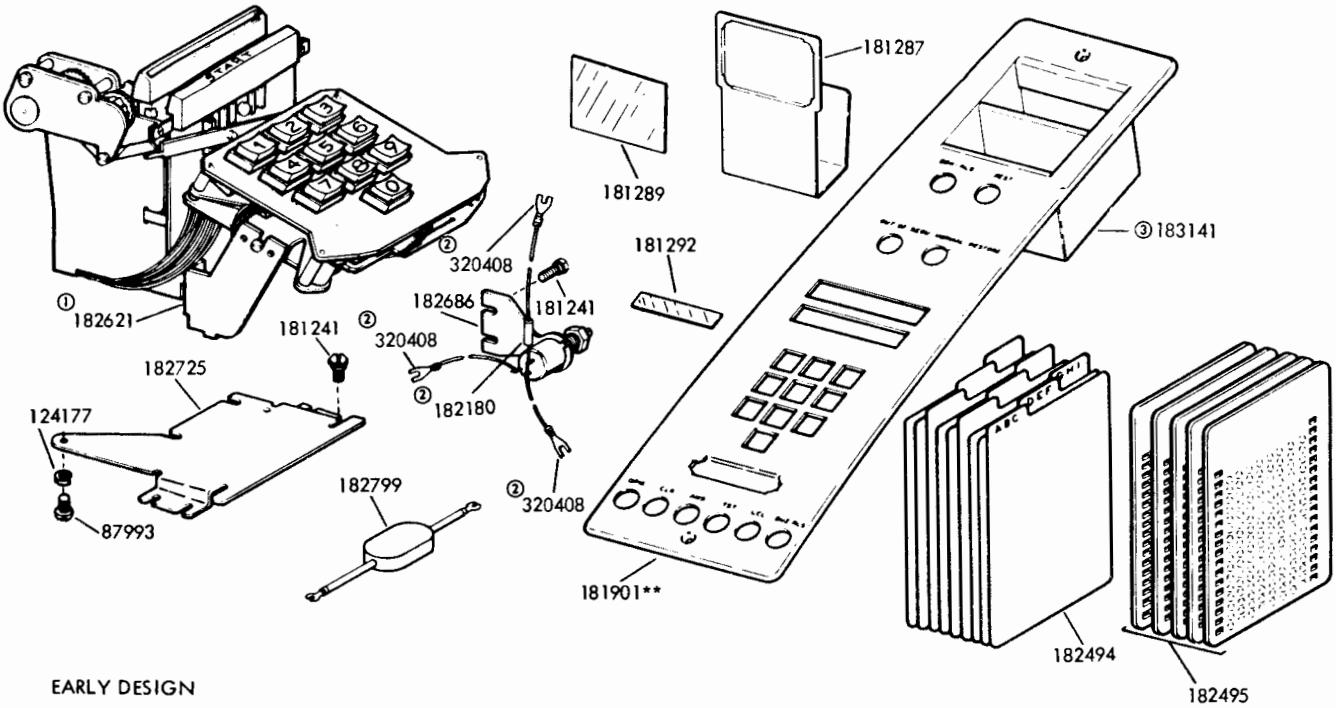

EARLY DESIGN

Manual 10-button
TOUCH-TONE and Card Dial

Part of 195927 (less Dialer) and 193488 (with Dialer) Modification Kits (Specification 50140S)

① Peculiar to 193488
② Part of 182686
③ Supplied as part of faceplate or can be ordered separately

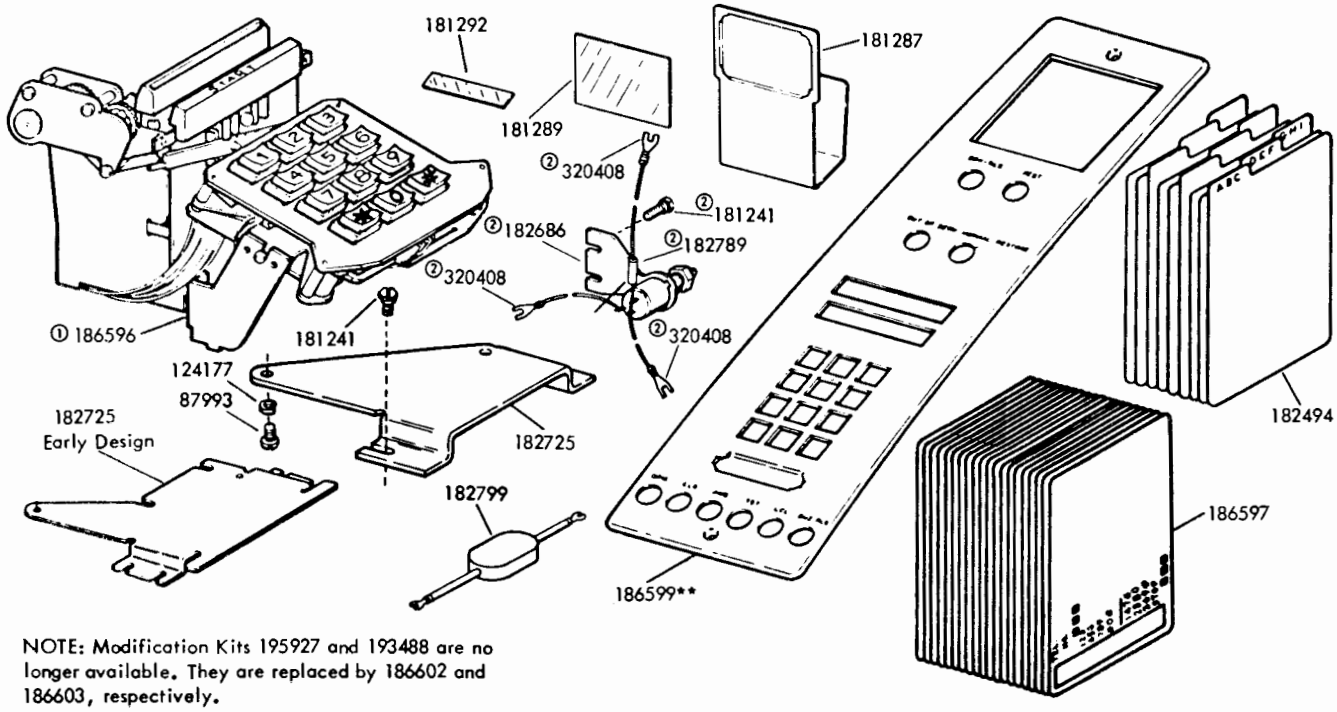

NOTE: Modification Kits 195927 and 193488 are no longer available. They are replaced by 186602 and 186603, respectively.

Manual 12-button
TOUCH-TONE and Card Dial

Part of 186602 (less Dialer) and 186603 (with Dialer) Modification Kits (Specification 50140S)

① Peculiar to 186603
② Part of 182686
**Refer to page 1 for finish suffix

FIGURE 19. 186602 AND 186603 DIAL MODIFICATIONS

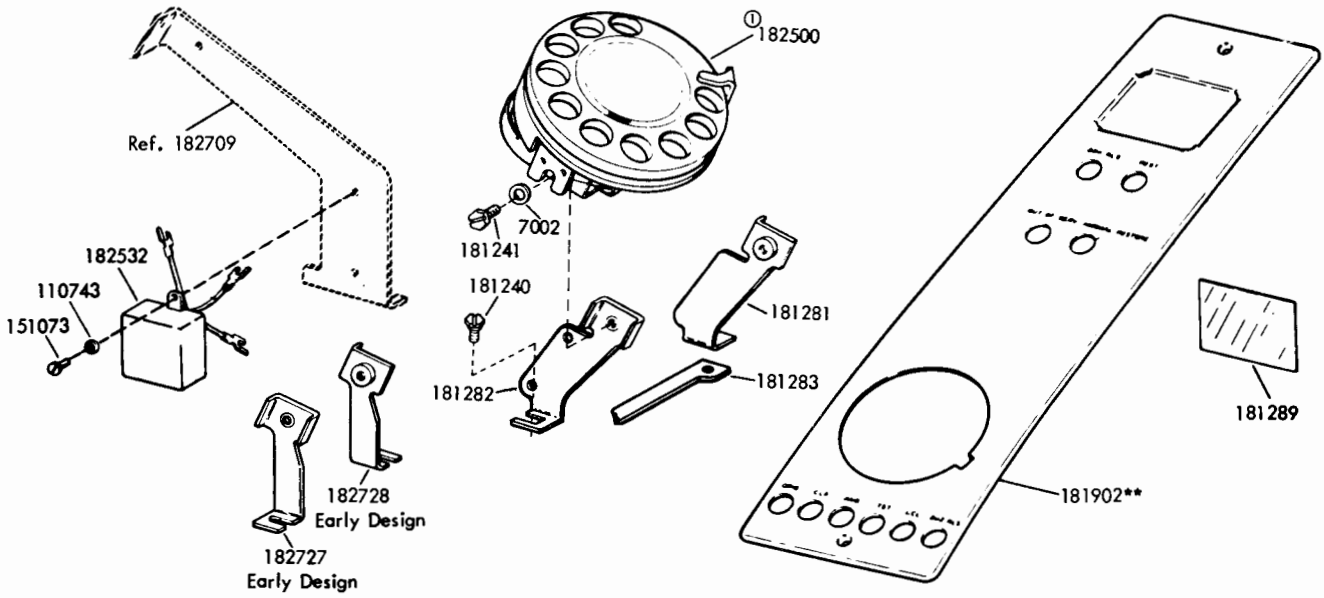

Rotary Dial — Part of 193489 (with Dialer) and 195926 (less Dialer) Modification Kits (Specification 50156S)

① Peculiar to 193489

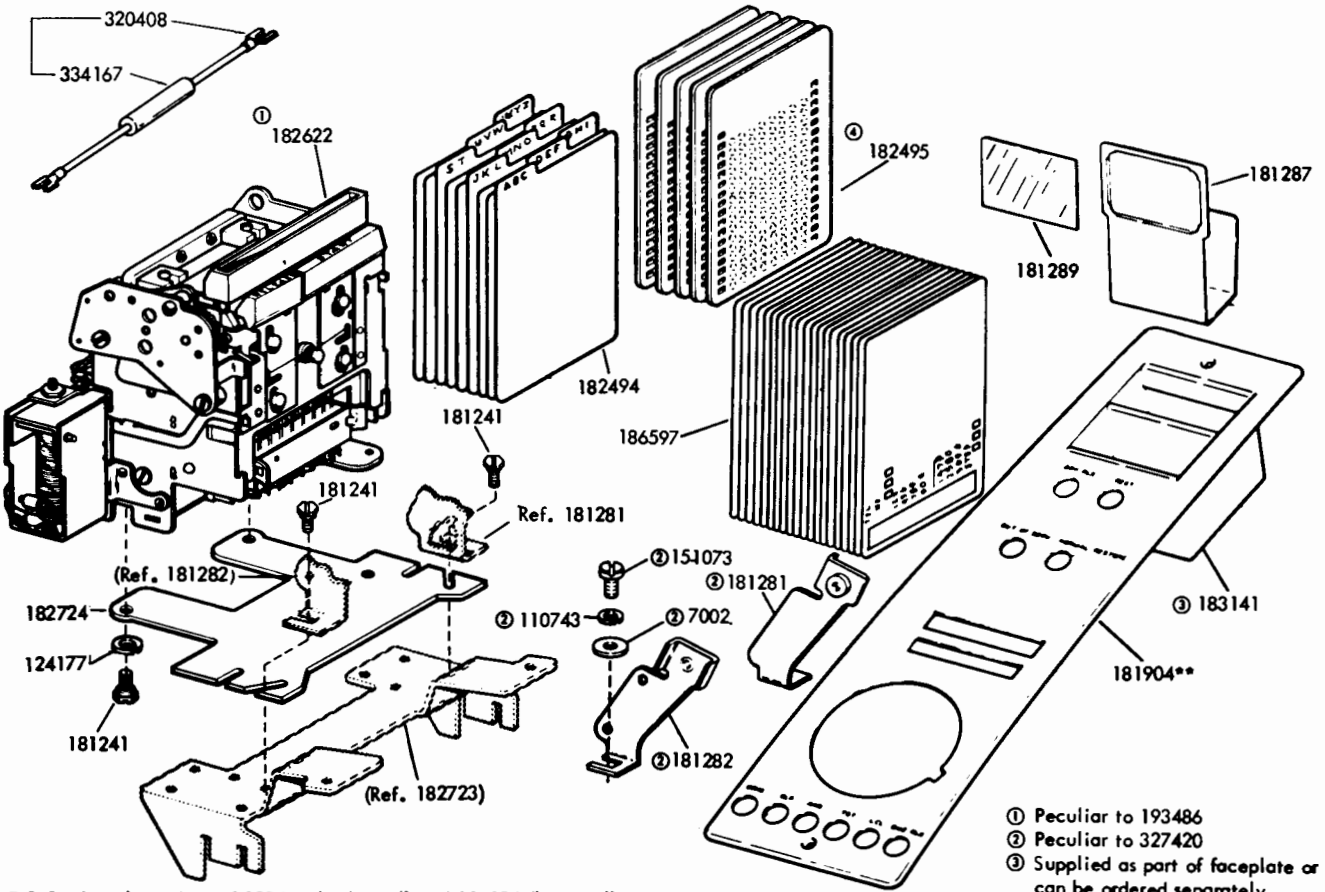

DC Card Dial — Part of 193486 (with Dial) and 195924 (less Dial) Modification Kits (Specification 50164S) and 327420 (less Dial) Modification Kit (Specification 50156S)

① Peculiar to 193486
② Peculiar to 327420
③ Supplied as part of faceplate or can be ordered separately
** Refer to page 1 for finish suffix
④ Replaced by 186597

FIGURE 20. 193486, 193489, 195924, 195926 AND 327420 DIAL MODIFICATIONS

KEY ASSEMBLY PART LOCATION TABLE									
POSITION			182581	182582					182589
F	Plunger Switch			182559 182562					182559
E	Plunger Switch		182667 182562	182559 182561					182559 182562
D	Plunger Switch		182667 181638	182559 182562					182559 182562
C	Plunger Switch		182667	182559 182562					182559
B	Plunger Switch		182667 182562	182559 182562					182559
A	Plunger Switch			182559 182562					182559 182562
Plunger Spring			182554	182554					182554
Lockout				182556					182556
Latch Bar				182666					182666
Latch Spring				182535					182535
Bracket			181637	182557					182557

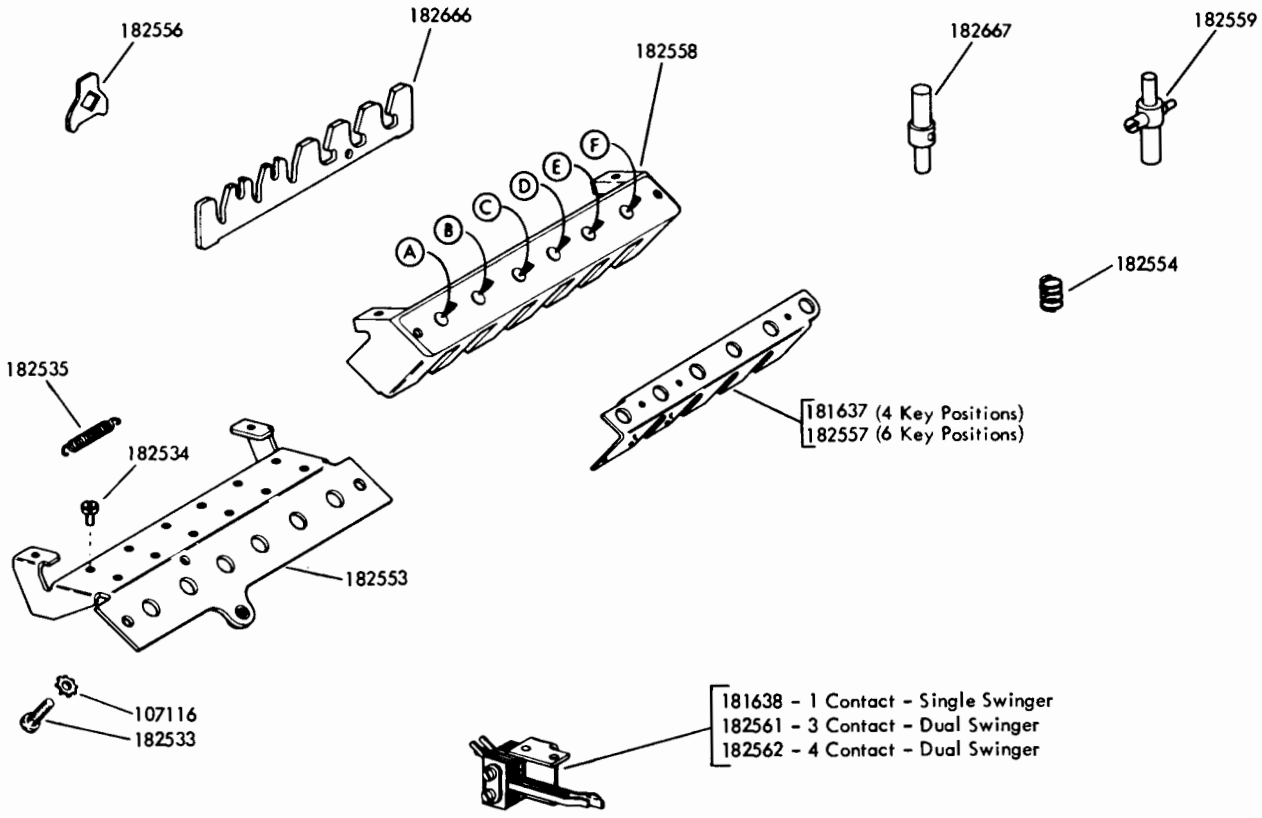

FIGURE 21. KEY ASSEMBLIES

Computer Museum

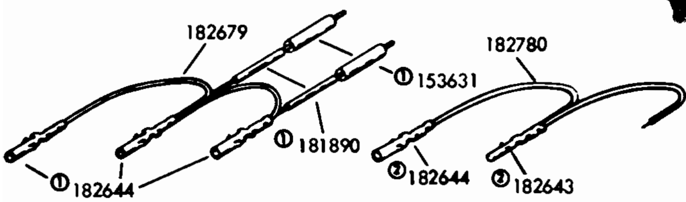

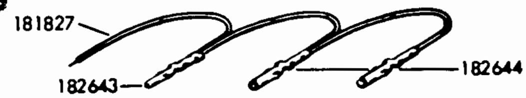

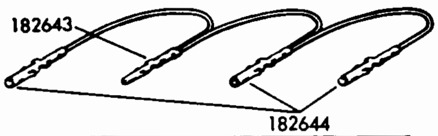

PART NO.	COLOR
181827	W-BK
181828	W-O
181829	W-BL

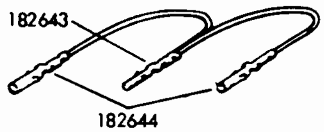

PART NO.	COLOR
182784	W-O
182785	W-BL

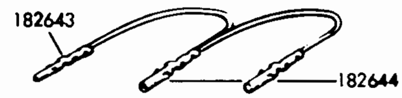

PART NO.	COLOR
182786	W-BR
182787	W-Y
182788	W-P

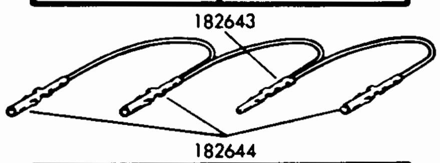

PART NO.	COLOR
181830	W-Y
181831	W-P
181832	W-BR

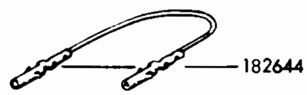

PART NO.	COLOR
180886	G
180887	R
180888	BL
180889	Y
180890	W
180893	R-O
180894	W-BL
180895	W-G
180896	W-Y
180897	W-O
180898	W-R
180899	W-P
180900	O
181837	BK

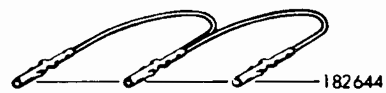

PART NO.	COLOR
182781	W-R
182782	W-G
182783	W-S
184079	W-R
184080	W-O
184081	W-Y
184082	W-G
184083	W-BL
184084	W-BK

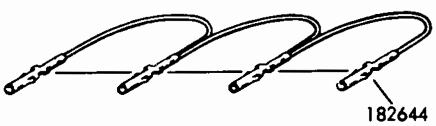

PART NO.	COLOR
180877	W-R
180878	W-O
180879	W-Y
180880	W-G
180881	W-BL
180882	W-BK
180884	W-S

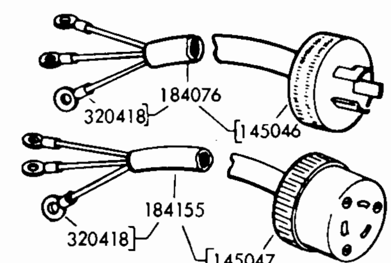

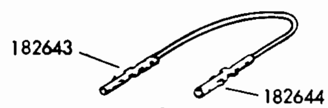

PART NO.	COLOR
182693	O
181836	BL

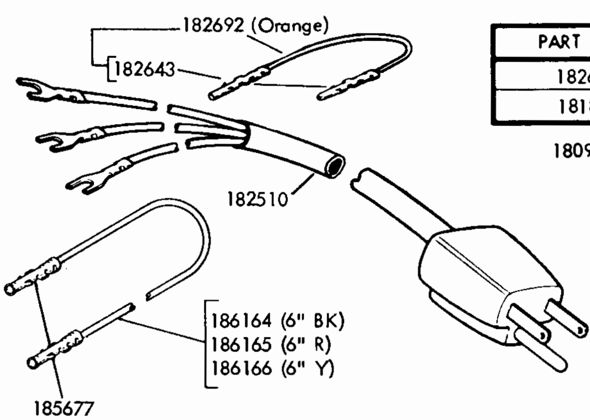

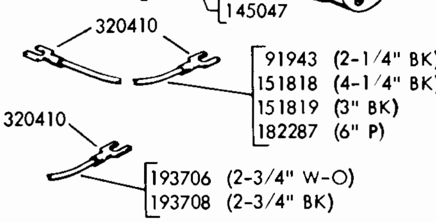

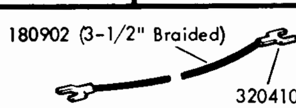

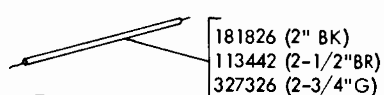

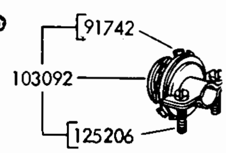

Color Abbreviations

BK = Black	BL = Blue
W = White	S = Slate
R = Red	BR = Brown
G = Green	O = Orange
Y = Yellow	P = Purple

① Part of 182679
② Part of 182780

FIGURE 22. POWER CORDS AND JUMPERS

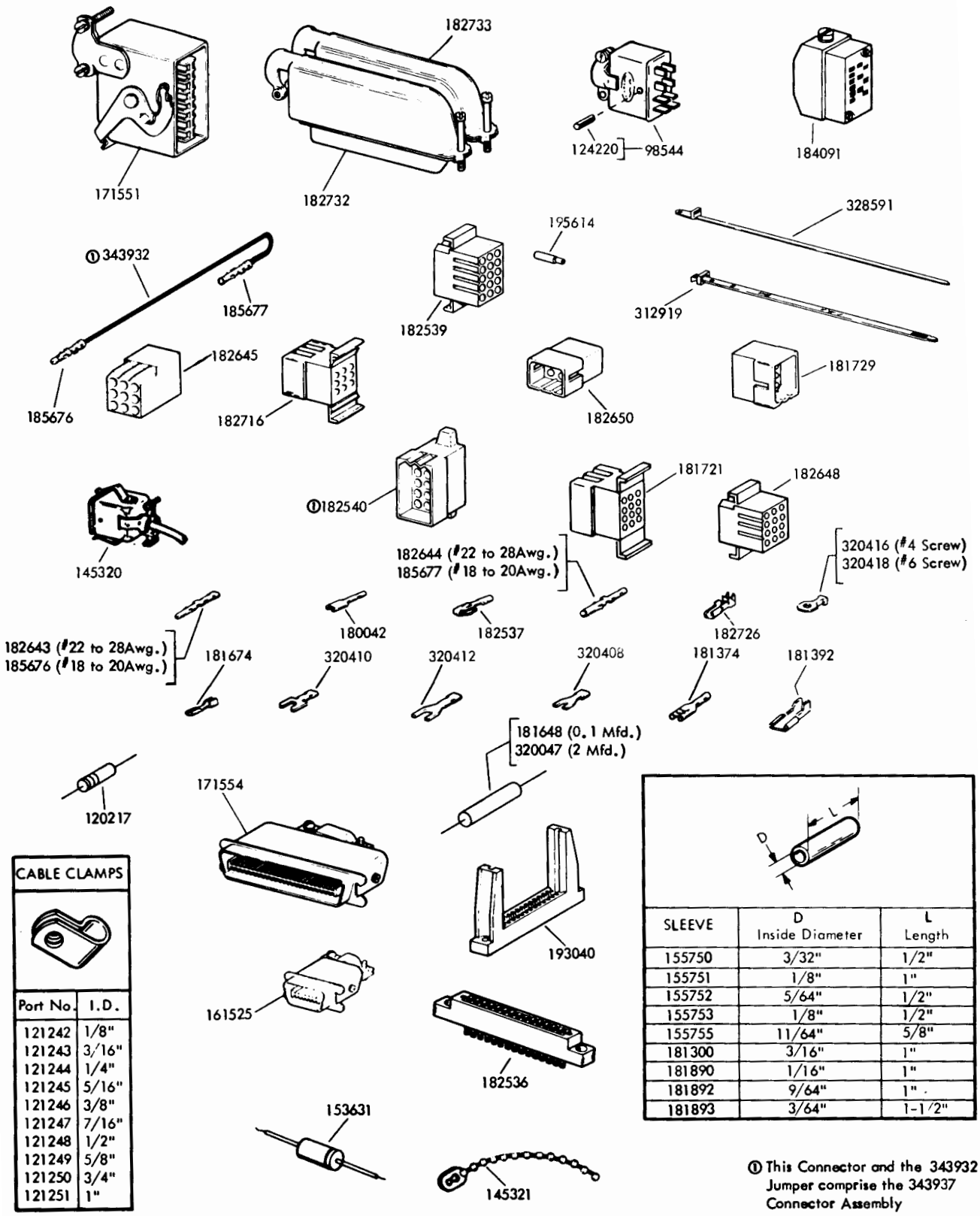

CABLE CLAMPS	
Port No.	I.D.
121242	1/8"
121243	3/16"
121244	1/4"
121245	5/16"
121246	3/8"
121247	7/16"
121248	1/2"
121249	5/8"
121250	3/4"
121251	1"

SLEEVE	D Inside Diameter	L Length
155750	3/32"	1/2"
155751	1/8"	1"
155752	5/64"	1/2"
155753	1/8"	1/2"
155755	11/64"	5/8"
181300	3/16"	1"
181890	1/16"	1"
181892	9/64"	1"
181893	3/64"	1-1/2"

① This Connector and the 343932 Jumper comprise the 343937 Connector Assembly

FIGURE 23. CABLE COMPONENTS

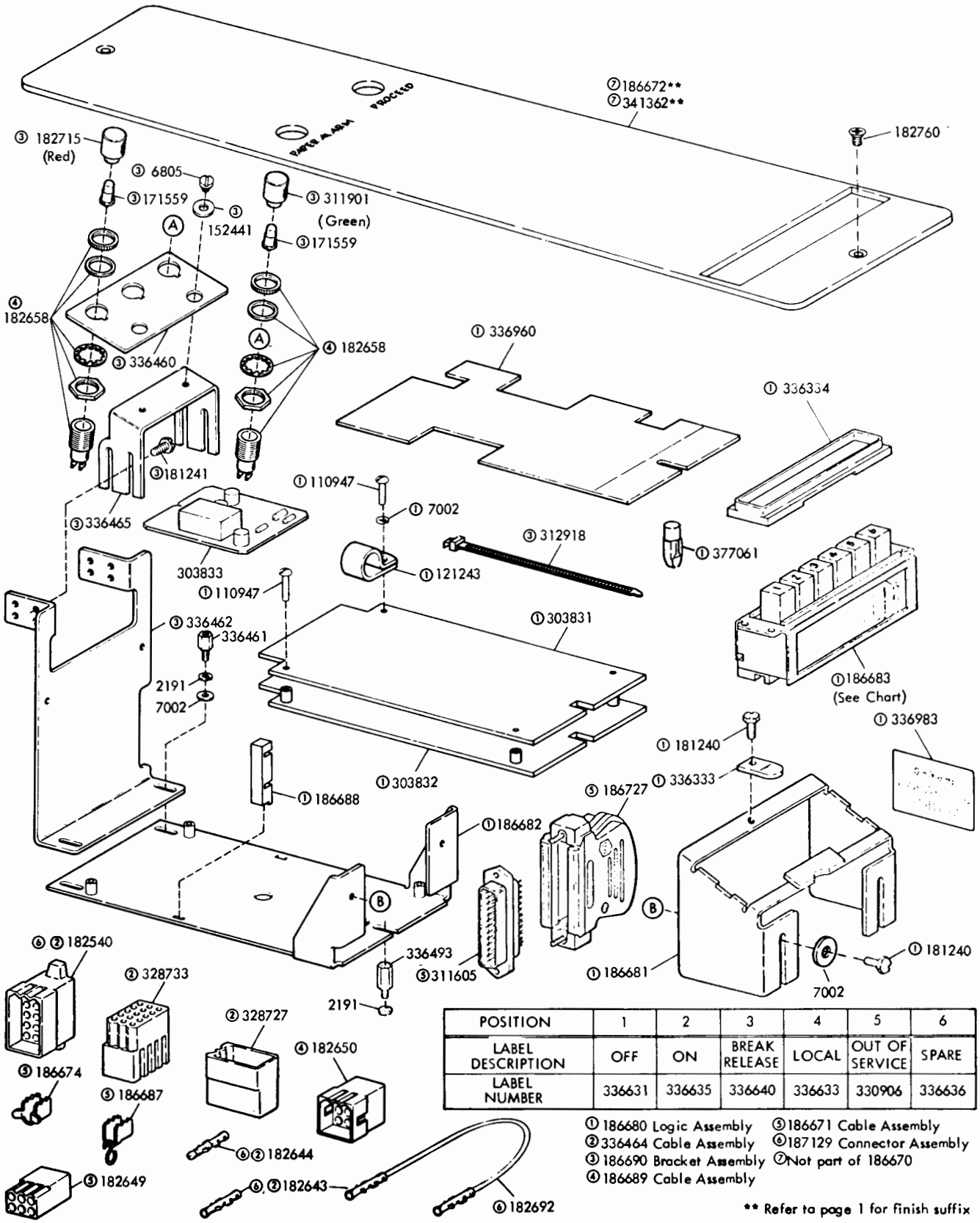

POSITION	1	2	3	4	5	6
LABEL DESCRIPTION	OFF	ON	BREAK RELEASE	LOCAL	OUT OF SERVICE	SPARE
LABEL NUMBER	336631	336635	336640	336633	330906	336636

① 186680 Logic Assembly
② 336464 Cable Assembly
③ 186690 Bracket Assembly
④ 186689 Cable Assembly
⑤ 186671 Cable Assembly
⑥ 187129 Connector Assembly
⑦ Not part of 186670

** Refer to page 1 for finish suffix

FIGURE 24. 186670 MODIFICATION KIT TO PROVIDE PRIVATE LINE

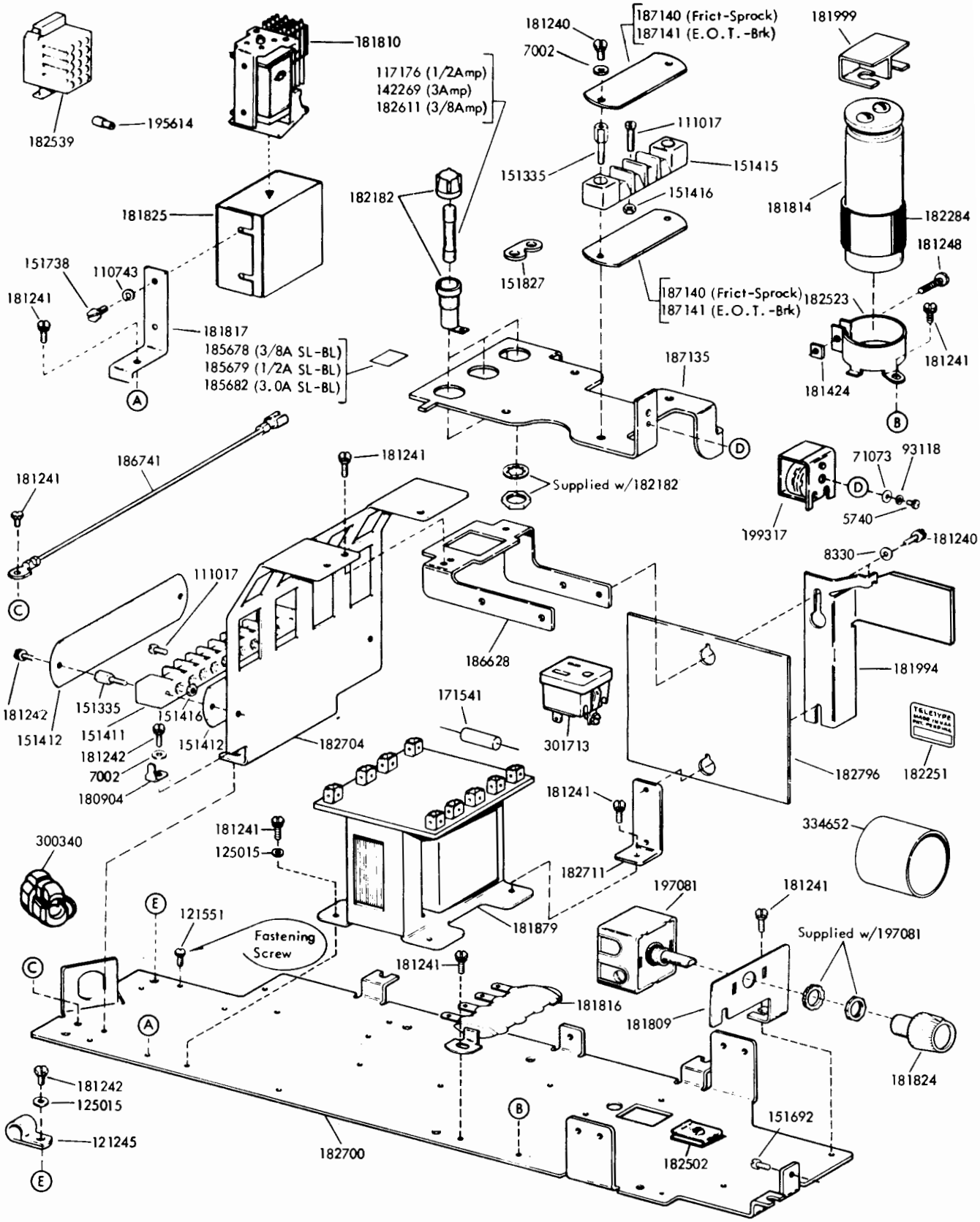

FIGURE 25. BASE PLATE AND ELECTRICAL COMPONENTS FOR PRIVATE WIRE SERVICE

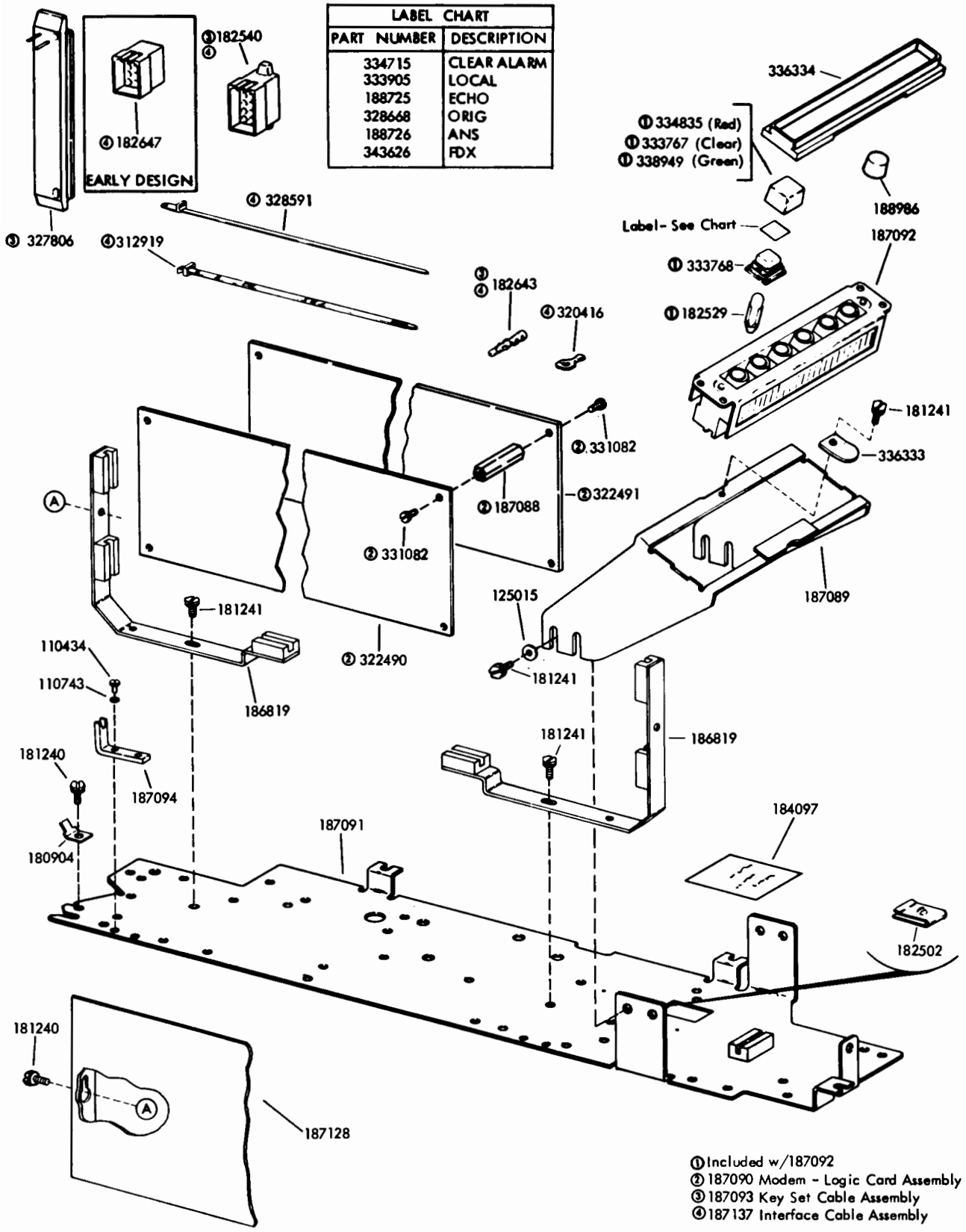

FIGURE 26. CALL CONTROL W/MODEM - LOGIC CARDS

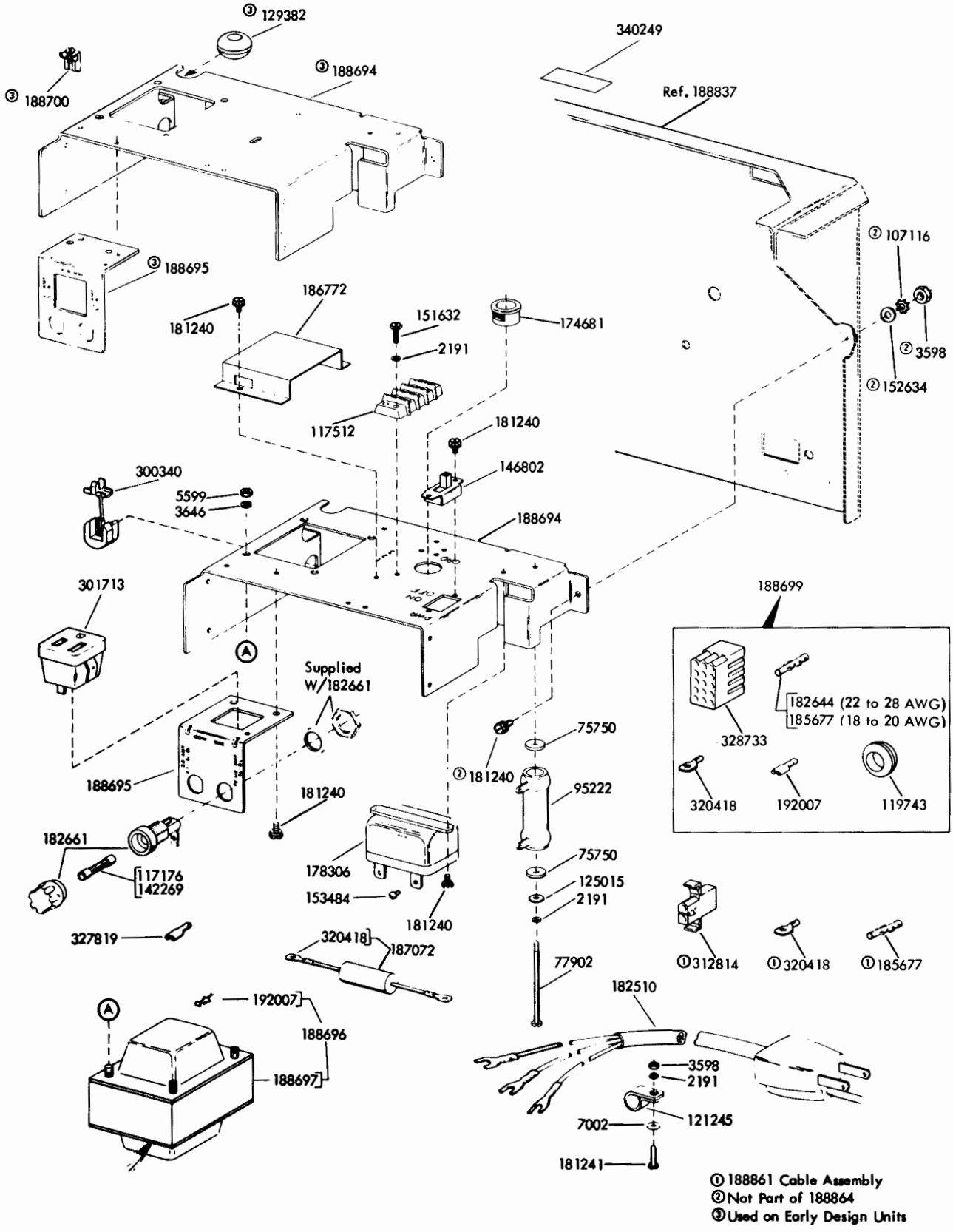

FIGURE 27. 188865 POWER SUPPLY ASSEMBLY

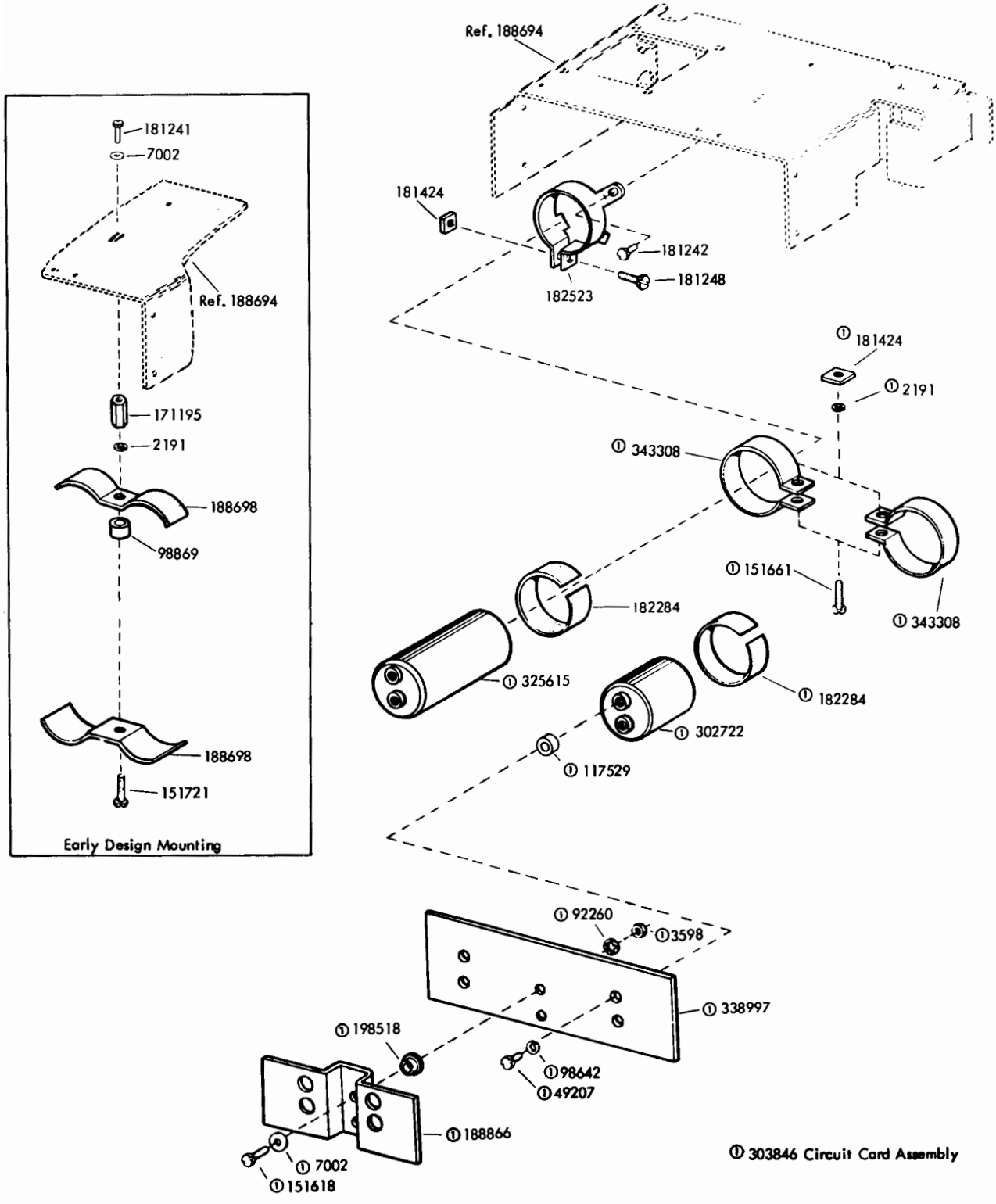

FIGURE 28. 188865 POWER SUPPLY ASSEMBLY (Continued)

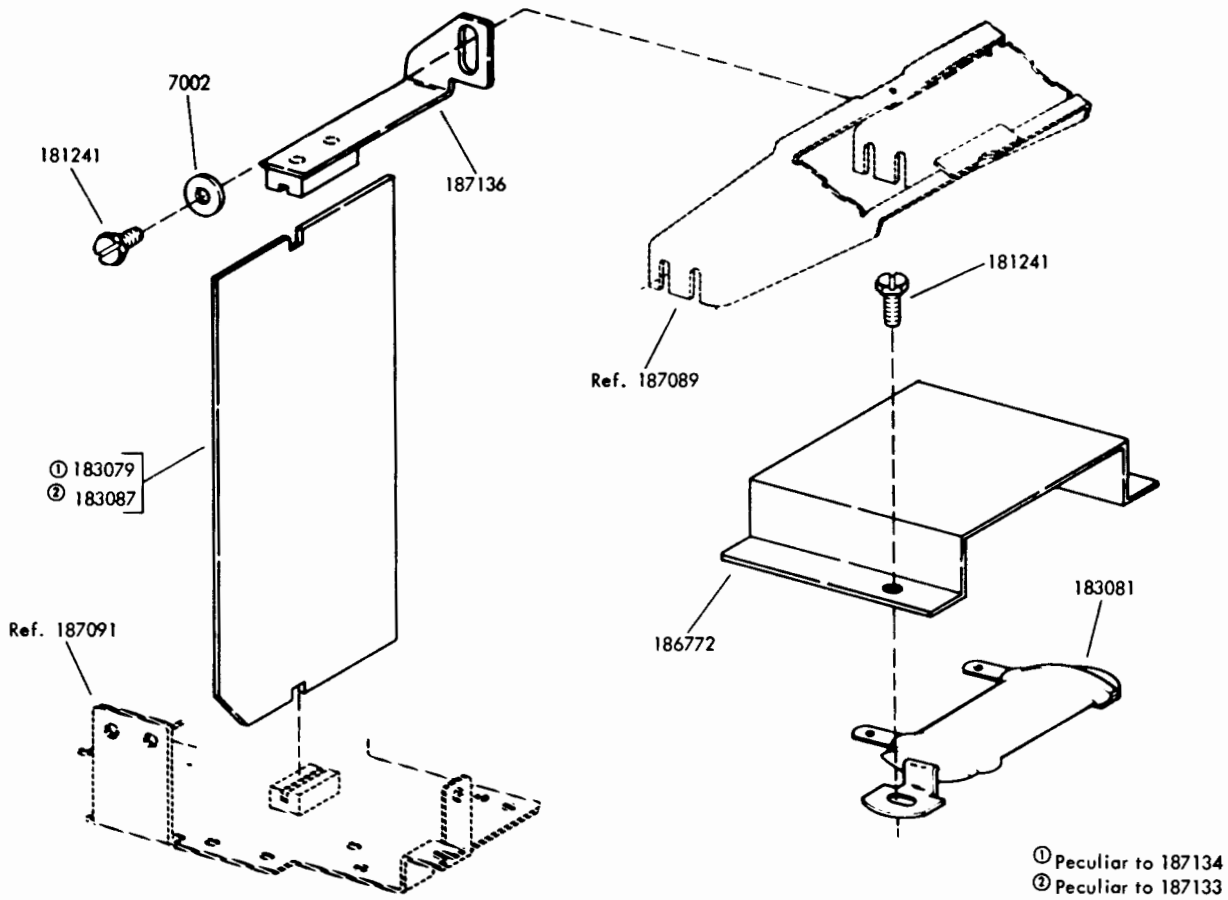

FIGURE 29. 187133 (MANUAL) AND 187134 (AUTOMATIC) READER CARD SET OF PARTS

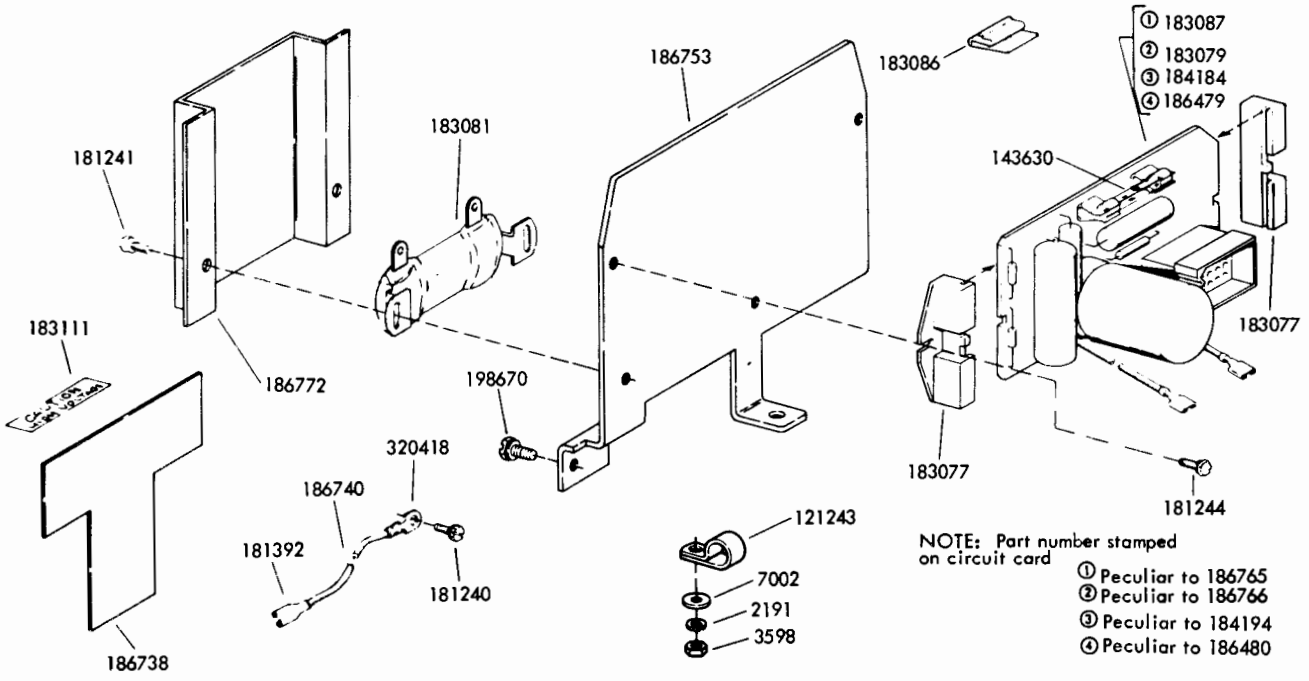

FIGURE 30. 186765 (MANUAL), 186766 (AUTOMATIC), 184194 AND 186480 POWER PACK ASSEMBLIES

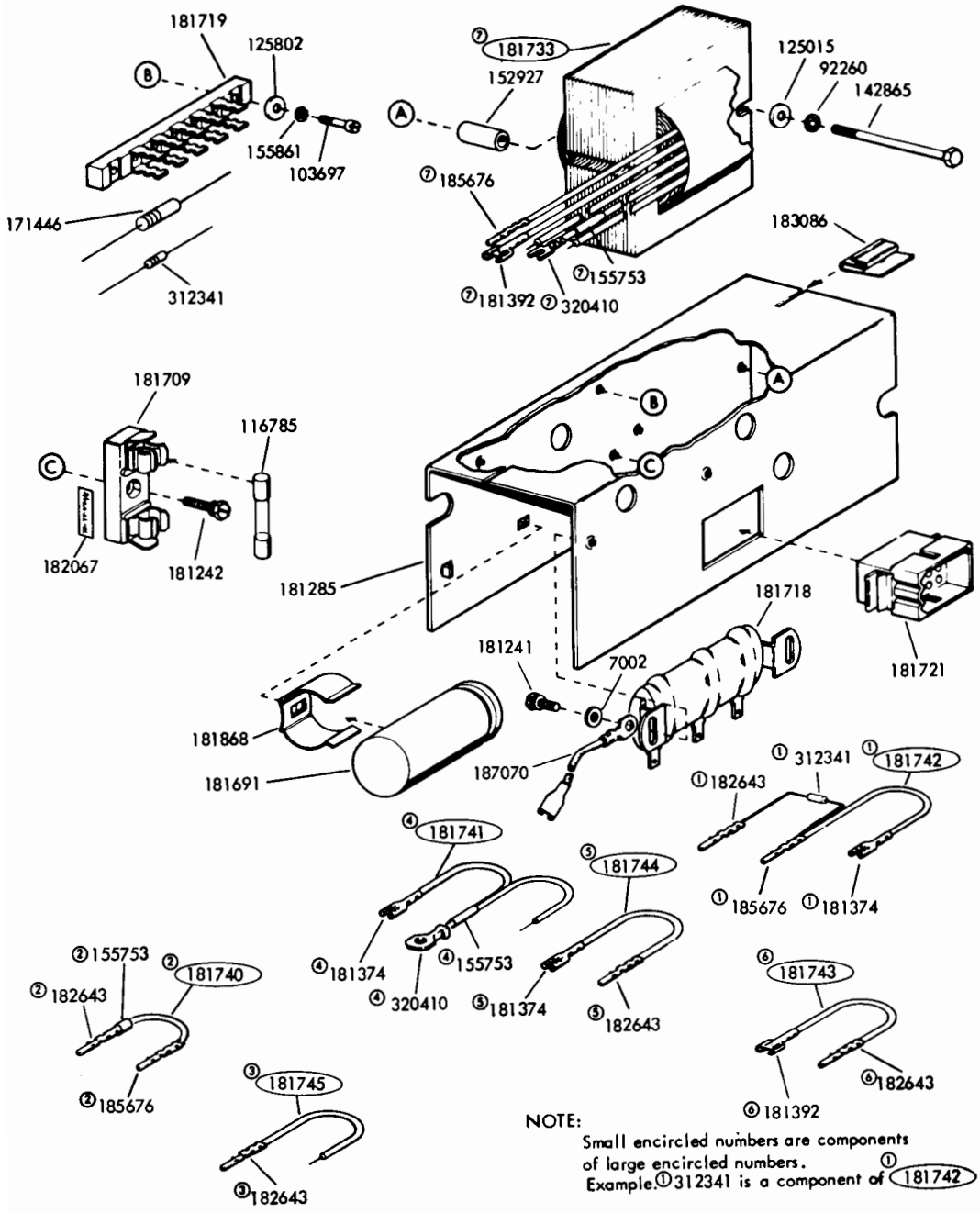

FIGURE 31. 181720 POWER PACK ASSEMBLY

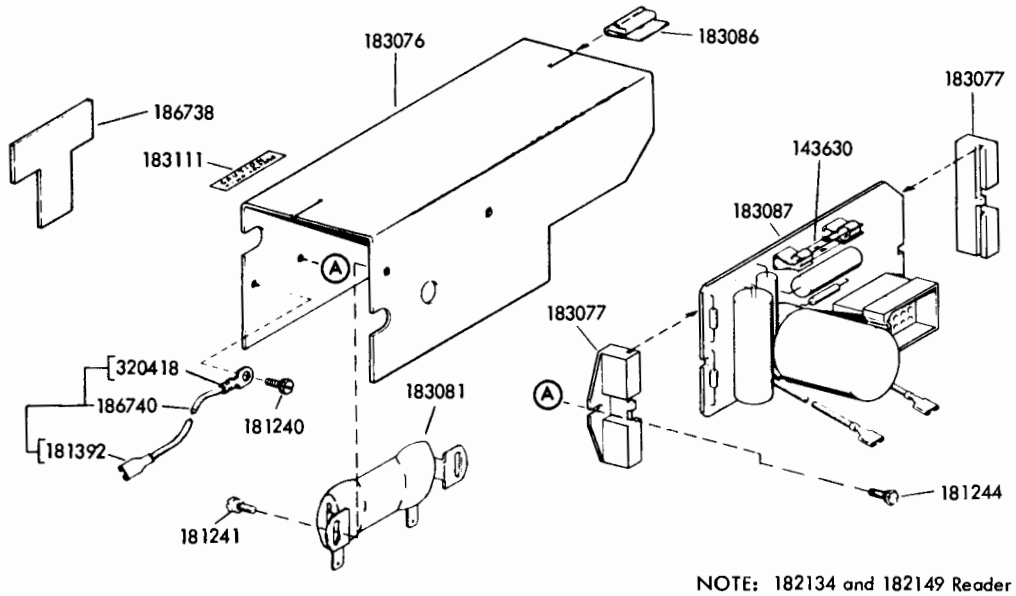

NOTE: 182134 and 182149 Reader Power Pack Assembly no longer available. Replaced by 186765

FIGURE 32. 182134 AND 182149 READER POWER PACK ASSEMBLY

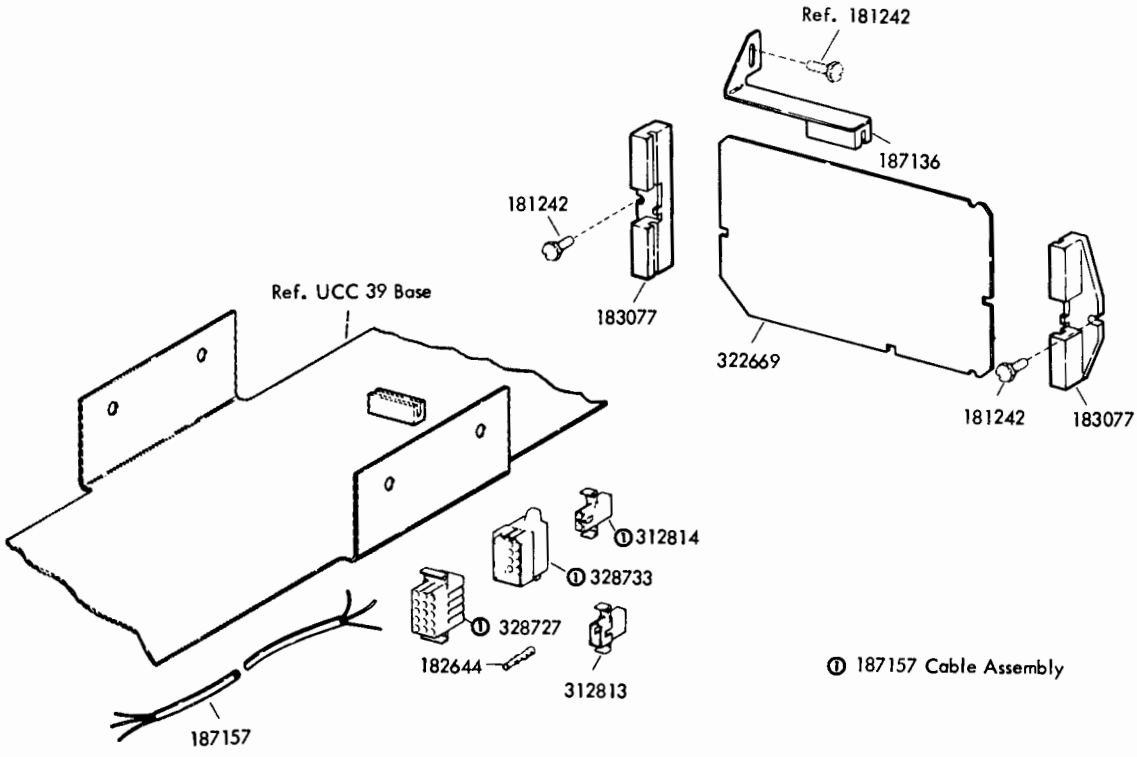

FIGURE 33. 187156 MODIFICATION KIT TO ADD 20/60 MA DC INTERFACE

NUMERICAL INDEX

Part Number	Description and Page Number
1010	Screw, 6-40 Shoulder 16
1018	Screw, 3-48 x 5/16 Fil 4
1028	Screw, 4-40 x 1/4 Fil 3
1207	Screw, 4-36 x 5/16 Flat 16
2191	Lockwasher 2 to 5,9 to 13, 15,17,18,25,28,29,30
2846	Washer, Flat 11
3598	Nut, 6-40 Hex 4,5,6,8,9 10,13,17,28,29,30
3606	Nut, 6-40 Hex 4,12
3640	Lockwasher 11,16
3646	Lockwasher 9,28
3649	Washer, Flat 4,6
5599	Nut, 8-32 Hex 9,28
5740	Screw, 2-56 x 1/4 Fil 26
6347	Screw, 6-32 x 3/8 Rd 14
6805	Screw, 6-40 Shoulder 15, 16,25
7001	Washer, Flat 12,17
7002	Washer, Flat 2 to 13,15, 17,21,25,26,28,29,30,31
8330	Washer, Flat 6,9,10,13, 17,26
42823	Washer, Flat 5,6,13
49054	Screw, 2-56 x 3/16 Flat 11
49207	Screw, 10-32 x 9/16 Rd 29
70072	Lockwasher 4
71073	Washer, Flat 17,26
75750	Washer, Insulating 3,28
77362	Resistor, 350 Ohm 3
77902	Screw, 6-40 x 2-3/8 Rd 3, 28
87993	Screw, 6-40 x 5/32 Fil 20
90787	Screw, 4-40 x 3/8 Hex 2
91742	Locknut 23
91943	Jumper, 2-1/4" Black 23
92260	Lockwasher 2,13,29,31
93117	Lockwasher 17
93118	Lockwasher 26
95222	Resistor, 40 Ohm 28
96717	Screw, 4-40 Shoulder 2
98544	Connector, 8 Pt Plug 24
98642	Lockwasher 29
98726	Screw, 3-48 x 1/4 Fil 4
98869	Spacer 29
103092	Connector, Cord 23
103469	Screw, 4-40 Spl 11
103697	Screw, 4-40 x 7/16 Fil 31
107116	Lockwasher 4,22,28
110434	Screw, 4-40 x 3/16 Fil 27
110435	Nut, 4-40 Hex 17
110743	Lockwasher 2,3,5,6,7,13, 16,17,21,26,27
110947	Screw, 6-32 x 13/16 Rd 25
111017	Screw, 6-40 x 5/16 Fil 3, 5 to 10,13,26
111647	Resistor, 1,000 Ohm 3
112485	Screw, 6-32 x 1/4 Fil 2,18
112620	Screw, 4-40 x 1/2 Hex 3,17
113442	Jumper, 2-1/2" Brown 23
115594	Nut, Speed 16
116785	Fuse, .3 Amp 31
117176	Fuse, SL-BL 0.5 Amp 2,6, 8,18,26,28
117512	Block, Terminal 28
117529	Spacer, .281" Thk 29
119743	Grommet, Rubber 28
120167	Fuse, SL-BL 3.2 Amp 6,8,13
120217	Resistor, 1200 Ohm 24
121242	Clamp, 1/8 ID Cable 24
121243	Clamp, 3/16 ID Cable 24, 25,30
121244	Clamp, 1/4 ID Cable 14,24
121245	Clamp, 5/16 ID Cable 7,9, 24,26,28
121246	Clamp, 3/8 ID Cable 24
121247	Clamp, 7/16 ID 7,24
121248	Clamp, 1/2 ID Cable 24
121249	Clamp, 5/8 ID Cable 24
121250	Clamp, 3/4 ID Cable 24
121251	Clamp, 1 ID Cable 24
121551	Screw, 8-32 x 1/4 Hex 2, 3,7,9,10,26
124177	Lockwasher 4,6,7,17,20,21
124220	Pin, Drive 24
125011	Washer, Flat 2,3,16,17
125015	Washer, Flat 3,4,6 to 9,17, 26,27,28,31
125205	Screw, 6-40 x 7/16 Fil 17
125206	Screw, 6-32 x 5/8 Fil 23
125802	Washer, Flat 31
129382	Grommet, Rubber 28
138538	Fuse, SL-BL 2 Amp 8,13
142269	Fuse, SL-BL 3 Amp 8,9,10 26,28
142669	Fuse, SL-BL 3 Amp 28
142865	Screw, 6-40 x 2-1/32 Hex 31
143613	Lamp, 14V Incandescent 2,16,18
143630	Fuse, .75 Amp 30,32
144590	Screw, 6-40 x 1-3/8 Fil 4
145046	Connector, 3 Pt Plug 23
145047	Connector, 3 Pt Receptacle 23
145320	Connector, 4 Pt Receptacle 24
145321	Tie, Cable 24
146802	Switch SP-ST Slide 28
150710	Screw, 6-40 x 1-1/4 Fil 9 17
150966	Insulator, Terminal 3
150978	Screw, 6-40 x 1-1/8 Fil 4
150982	Screw, 4-40 x 7/16 Fil 3
151073	Screw, 4-40 x 5/32 Fil 21
151152	Screw, 4-40 x 3/16 Hex 16
151335	Stud 3,5,6,8,9,10,13,26
151411	Block, Terminal 5,6,8,9, 10,13,26
151412	Insulator, Terminal 5,6, 8,9,10,13,26
151415	Block, Terminal 3,26
151416	Nut, 6-40 Hex 3,5,6,8,9, 10,13,26
151442	Screw, 6-40 x 1/2 Hex 4, 9,11,13,17
151618	Screw, 6-40 x 7/16 Fil 13, 29
151630	Screw, 6-40 x 1/4 Hex 2
151632	Screw, 6-40 x 3/8 Hex 8
151660	Screw, 6-40 x 7/8 Fil 6, 12
151661	Screw, 6-40 x 1 Fil 29
151685	Screw, 4-40 x 5/16 Fil 14
151687	Screw, 4-40 x 7/16 Fil 11
151692	Screw, 6-40 x 3/16 Fil 7,10,26
151693	Screw, 6-40 x 9/16 Fil 4
151721	Screw, 6-40 x 3/4 Hex 29
151731	Screw, 4-40 x 7/8 Fil 5, 6,13
151734	Screw, 4-40 x 3/8 Hex 16
151738	Screw, Spl 7,26
151818	Jumper, 4-1/4" Black 23
151819	Jumper, 3" Black 23
151827	Strap, Terminal 5,13,26

NUMERICAL INDEX (Continued)

Part Number	Description and Page Number
152441	Washer, Flat 15,16,25
152634	Washer, Flat 16,28
152893	Screw, 4-40 x 1/4 Hex 2,3
152927	Bushing 31
153484	Screw, 6-32 Spl 3,13,28
153631	Network, Spark Suppression 5,13,23,24
153799	Screw, 4-40 x 21/64 Hex 3
154173	Plate 16
155750	Sleeve, 3/32 ID x 1/2" Lg Insulating 11,17,24
155751	Sleeve, 1/8 ID x 1" Lg Insulating 11,24
155752	Sleeve, 5/64 ID x 1/2" Lg Insulating 24
155753	Sleeve, 1/8 ID x 1/2" Lg Insulating 24,31
155755	Sleeve, 11/64 ID x 5/8" Lg Insulating 11,17,24
155861	Lockwasher 31
156450	Screw, 2-56 x 1/2 Fil 17
156880	Jumper, 2-3/8" Black 14
159404	Post 11
159597	Washer, Flat 2
159931	Clamp 6,7
159932	Keeper 6,7
160859	Terminal 4,9,17
161525	Connector, 14 Pt Plug 24
162360	Fuse, SL-BL .8 Amp 6,9,13
165168	Key 11
171195	Post 29
171441	Resistor, 560 Ohm 11
171446	Resistor, 120 Ohm 31
171536	Resistor, 2,250 Ohm 5
171541	Diode 26
171551	Connector, 16 Pt Plug 24
171554	Connector, 50 Pt Plug 24
171559	Lamp, 28V Incandescent 11,15,25
171593	Fuse, .5 Amp 8
174681	Bushing, Snap 28
177113	Insulator 4,9,13,17
178306	Relay, Power 13,28
178535	Suppressor, Spark 3,13
178831	Connector, 2 Pt Receptacle 2,6,8,9,10,18
178832	Plate, Adapter 2,6,8,9,10, 18
178883	Resistor, 1,500 Ohm 5
180042	Terminal, Tab Type 24
180586	Sleeve, 5/32 ID x 21/32" Lg Insulating 17
180877	Jumper, 2-3/4" White-Red 23
180878	Jumper, 2-3/4" White-Orange 23
180879	Jumper, 2-3/4" White-Yellow 23
180880	Jumper, 2-3/4" White-Green 23
180881	Jumper, 2-3/4" White-Blue 23
180882	Jumper, 2-3/4" White-Black 23
180884	Jumper, 2-3/4" White-Slate 23
180886	Jumper, 2-1/2" Green 23
180887	Jumper, 2-1/2" Red 23
180888	Jumper, 2-1/2" Blue 23
180889	Jumper, 2-1/2" Yellow 23
180890	Jumper, 2-1/2" White 23
180893	Jumper, 2-1/2" Red-Orange 23
180894	Jumper, 2-1/2" White-Blue 23
180895	Jumper, 2-1/2" White-Green 23
180896	Jumper, 2-1/2" White-Yellow 23
180897	Jumper, 2-1/2" White-Orange 23
180898	Jumper, 2-1/2" White-Red 23
180899	Jumper, 2-1/2" White-Purple 23
180900	Jumper, 2-1/2" Orange 23
180902	Jumper, 3-1/2" Braided 23
180904	Tab, Terminal 5,6,8,9, 12,26,27
181106	Plate, Baffle 16
181107	Bracket 16
181196	Ring, Retainer 7
181204	Washer, Flat 11
181240	Screw w/Lockwasher, 6-40 x 3/16 Hex 2,6,8,9,10,12, 13,15,17,18,21,25,26,27, 28,30,32
181241	Screw w/Lockwasher, 6-40 x 1/4 Hex 2 to 13,16 to 21, 25 to 32
181242	Screw w/Lockwasher, 6-40 x 5/16 Hex 7 to 11, 26, 29,31,32
181243	Screw w/Lockwasher, 6-40 x 3/8 Hex 6
181244	Screw w/Lockwasher, 6-40 x 7/16 Hex 30,32
181245	Screw w/Lockwasher, 6-40 x 3/8 Hex 9
181248	Screw w/Lockwasher, 6-40 x 7/8 Hex 7,17,26,29
181263	Timer, Hour 6
181264	Bracket 6,13
181265	Timer w/Terminals 6
181266	Bushing, Insulating 17
181276	Nameplate 6,13
181281	Bracket, Right 21
181282	Bracket, Left 21
181283	Spacer, .065" Thk 3,21
181285	Cover, Mounting 31
181287	Holder, Card 20,21
181289	Window, Plastic 19,20,21
181292	Window, Plastic 19,20
181297	Cover, Insulating 5,6,8, 9,10
181300	Sleeve, 3/16 ID x 1" Lg Insulating 24
181374	Terminal, Tab Type 24,31
181392	Terminal, Tab Type 10,24, 30,31,32
181424	Nut, 6-40 Sq 7,9,17,26,29
181631	Strip Assembly, Lamp 2
181632	Button Assembly 2
181637	Bracket 22
181638	Contact Assembly 22
181645	Dial, Rotary 2
181648	Capacitor, .1 MFD 24
181661	Buzzer, 115V AC 2
181672	Relay, Power 4
181674	Terminal, Tab Type 24
181675	Transistor, Power 4,9,13, 17
181691	Capacitor, 150 MFD 31
181709	Holder, Fuse 31
181718	Resistor, 2,000-10,000 Ohm 31

NUMERICAL INDEX (Continued)

Part Number	Description and Page Number
181719	Strip, Terminal 31
181720	Power Supply 1,31
181721	Connector, 12 Pt Plug Type 24, 31
181729	Connector Assembly 24
181733	Transformer 31
181740	Cable Assembly 31
181741	Cable Assembly 31
181742	Cable Assembly 31
181743	Cable Assembly 31
181744	Cable Assembly 31
181745	Cable Assembly 31
181809	Bracket, Switch 7,10,26
181810	Relay 7,26
181814	Capacitor, 250 MFD 7,26
181815	Driver Assembly, Selector Magnet 1,17
181816	Resistor, 4,200 Ohm 7,26
181817	Bracket 7,26
181818	Cable Assembly 17
181819	Connector, 15 Pt Circuit Card 12,13,15,17
181821	Card, Circuit 17
181822	Bracket 17
181824	Knob, Gray Pointer 7,9,10, 16,26
181825	Cover, Relay 7,26
181826	Jumper, 2" Black 23
181827	Jumper, 2-3/4" White-Black 23
181828	Jumper, 2-3/4" White-Orange 23
181829	Jumper, 2-3/4" White-Blue 23
181830	Jumper, 2-3/4" White-Yellow 23
181831	Jumper, 2-3/4" White-Purple 23
181832	Jumper, 2-3/4" White-Brown 23
181836	Jumper, 4-1/2" Blue 23
181837	Jumper, 4-1/2" Black 23
181840	Nameplate 8
181842	Nameplate 8
181844	Nameplate 8,9
181845	Nameplate 6,8
181857	Plate 9
181868	Clip, Speed 31
181879	Transformer, Power 8,26
181882	Bracket, Switch 9
181890	Sleeve, 1/16 ID x 1" Lg Insulating 23,24
181892	Sleeve, 9/64 ID x 1" Lg Insulating 24
181893	Sleeve, 3/64 ID x 1-1/2" Lg Insulating 5,24
181901**	Faceplate 20
181902**	Faceplate 21
181903**	Faceplate 19
181904**	Faceplate 21
181906**	Faceplate 19
181994	Bracket, Guide 8,26
181999	Insulator 7,17,26
182044	Modification Kit 6
182065	Plate, Identification 8,9
182066	Plate, Identification 9
182067	Nameplate 31
182134	Power Pack 1,32
182149	Power Pack 1,32
182162	Post 4
182173	Spacer 9
182180	Resistor, 200 Ohm 19,20
182182	Holder, Fuse 2,6,8,9,10, 13,18,26
182184	Fuse, 2.8 Amp 8,9
182193	Insulator 3
182251	Plate, Identification 4, 17,26
182284	Insulator, .015" Thk 7, 17,26,29
182287	Jumper, 6" Purple 6,23
182489	Modification Kit 1,19
182494	Card Set, Index 20,21
182495	Card Set, Dialing 20,21
182500	Dial, Rotary 21
182501	Capacitor, 1,5000 MFD 4,9, 17
182502	Nut, No. 14 Speed 2,3,7, 9,10,12,26,27
182503	Ringer w/Terminals 16
182510	Cord, Power 23,28
182520	Rectifier 6,8
182523	Clamp, 1-3/8" ID Mounting 7,9,17,26,29
182524	Button Assembly 3
182527	Screw, 4-40 Shoulder 2
182529	Lamp, 10V 2,3,27
182532	Filter 21
182533	Screw, 6-32 x 5/16 Rd 22
182534	Screw, 4-40 Spl 22
182535	Spring 22
182536	Connector, 15 Pt Circuit Card 4,6,17,24
182537	Terminal, Tab Type 24
182539	Connector, 15 Pt Receptacle Type 5,6,8,10,13,24, 26
182540	Connector, 15 Pt Plug Type 14,24,25,27
182553	Plate, Base 22
182554	Spring, Compression 22
182556	Lockout 22
182557	Bracket 22
182558	Frame 22
182559	Plunger 22
182561	Contact Assembly 22
182562	Contact Assembly 22
182563	Plate w/Bracket 2
182565	Bracket 2
182566	Bracket, Left 2
182569	Clamp 5
182571	Screw, 6-40 Shoulder 2
182576	Bracket, Right 2
182577	Bracket 2
182581	Key Assembly 22
182582	Key Assembly 22
182589	Key Assembly 22
182611	Fuse, SL-BL 3/8 Amp 5,6, 8,10,26
182615	Pad 5
182619	Screw, 6-40 Shoulder 16
182620	Dial, Touch-Tone 19
182621	Dial, Touch-Tone Card 20
182622	Dial, DC Card 21
182630	Card, Circuit 12,17
182643	Terminal, Plug Type 5,10, 14,17,23,24,25,27,31
182644	Terminal, Receptacle Type 5,10,14,23,24,25,28,32
182645	Connector, 9 Pt Receptacle Type 24
182647	Connector, 12 Pt Plug Type 27
182648	Connector, 12 Pt Receptacle Type 24
182649	Connector, 6 Pt Receptacle Type 25

NUMERICAL INDEX (Continued)

Part Number	Description and Page Number
182650	Connector, 6 Pt Plug Type 24, 25
182653	Knob 16
182657	Transformer, Power 6
182658	Socket, Lamp 2,11,16,18, 25
182660	Switch, Pushbutton 15,16
182661	Holder, Fuse 5,28
182666	Bar, Latch 22
182667	Plunger 22
182669	Relay, Power 3
182679	Jumper w/Spark Suppression 23
182682	Speaker, 2" 16
182683	Resistor, 50 Ohm 16
182684	Strap 3
182685	Strap 3
182686	Resistor Assembly 50,000 Ohm 19,20
182688	Switch, Turn Button 2,16, 18
182692	Jumper, 2-1/4" Orange 23, 25
182693	Jumper, 2-1/4" Orange 23
182695	Driver Assembly, Selector Magnet 1,17
182700	Plate, Base 3,6,7,8,16, 17,26
182703	Bracket 17
182704	Bracket 6,8,10,26
182706	Plate, Pilot 16
182707	Bracket, Pilot 16
182708	Bracket, Left 3
182709	Bracket, Right 3,21
182710	Bracket, Upper 6,8,10
182711	Bracket, Lower 6,8,26
182713	Cap, Amber Lens 16
182714	Cap, White Lens 2,11,15, 16,18
182715	Cap, Red Lens 11,25
182716	Connector, 9 Pt Plug Type 17,24
182717	Board, Terminal 3
182718	Buzzer, 10V AC 3
182719	Bracket, Guide 6
182720	Bracket, Dial 19
182721	Bracket 16
182722	Transformer w/Terminals 17
182723	Bracket 3,21
182724	Plate, Dial 21
182725	Plate, Tone Dialer 20
182726	Terminal, Receptacle Type 17,24
182727	Bracket, left 21
182728	Bracket, Right 21
182729	Link, Ringer 16
182730	Bracket, Support 3
182731	Post 6,12
182732	Connector, 50 Pt Plug 24
182733	Connector, 50 Pt Receptacle 24
182750	Card, Amplifier Circuit 6
182760	Screw, 6-32 Spl 25
182761	Capacitor, 0.5 MFD 3
182768	Bracket, Fuse 8
182769	Block 11,16
182780	Jumper, 2-1/4" White-Black 23
182781	Jumper, 2-3/4" White-Red 23
182782	Jumper, 2-3/4" White-Green 23
182783	Jumper, 2-3/4" White-Slate 23
182784	Jumper, 2-1/4" White-Orange 23
182785	Jumper, 2-1/4" White-Blue 23
182786	Jumper, 2-1/4" White Brown 23
182787	Jumper, 2-1/4" White-Yellow 23
182788	Jumper, 2-1/4" White-Purple 23
182789	Resistor, 200 Ohm 19,20
182791	Bracket 2,18
182793	Plate, Heat Sink 17
182794	Bracket 16
182795	Switch, DP-DT 2,18
182796	Insulator, .032" Thk 6, 8,26
182799	Capacitor, 20-30 MFD 19, 20
183076	Bracket, Rectifier 32
183077	Clamp, Circuit Card 30,32
183079	Card, Circuit 30
183081	Resistor, 850 Ohm 30,32
183086	Clip 30,31,32
183087	Card, Circuit 30,32
183111	Label 13,17,30,32
183141	Holder, Card 20,21
183511	Plate, Pilot 16
183512	Bracket, Switch 16
183524	Button, Turn 2,16,18
183525	Washer, Flat 2,16,18
183526	Ring, Retaining 2,16,18
183985	Driver Assembly, Selector Magnet 17
184012	Driver Assembly, Selector Magnet 17
184076	Cable Assembly 23
184079	Jumper, White-Red 23
184080	Jumper, White-Orange 23
184081	Jumper, White-Yellow 23
184082	Jumper, White-Green 23
184083	Jumper, White-Blue 23
184084	Jumper, White-Black 23
184091	Connector, 12 Pt Plug 24
184097	Plate 27
184155	Cable Assembly 23
184161	Bracket 9
184162	Connector, 22 Pt Circuit Card 9
184166	Bracket 9
184168	Card, Circuit 9
184169	Capacitor, 500-600 MFD 9
184171	Strip, Terminal 9
184184	Card Circuit 30
184193	Transformer 9
184194	Power Pack 1,30
184209	Insulator 9
185676	Terminal, Plug Type 10, 17,24,31
185677	Terminal, Receptacle Type 4,10,23,24,28
185678	Plate, Identification 5,6,8,26
185679	Plate, Identification 2,6,8,18,26
185680	Plate, Identification 13
185682	Plate, Identification 8, 10,26
185683	Plate, Identification 6,8
185688	Plate, Identification 6,13
186000	Driver Assembly, Selector Magnet 1,17

NUMERICAL INDEX (Continued)

Part Number	Description and Page Number
186059	Terminal 4,9,13,17
186060	Screw, 6-40 Shoulder 2
186164	Jumper, 6" Black 23
186165	Jumper, 6" Red 23
186166	Jumper, 6" Yellow 23
186170	Bracket 8
186224	Plate 2
186318	Timer w/Terminals 6
186423	Insulator 12
186424	Plate 13
186425	Plate, Base 12
186426	Bracket 12,13
186427	Bracket 12
186431	Cable Assembly 13
186434	Transformer 12
186438	Card, Circuit 12
186439	Card, Circuit 12
186448	Timer Assembly 5
186463	Post 12
186465	Timer Assembly 5
186479	Card, Circuit 30
186480	Power Pack 1,30
186535	Bracket 13,15
186595	Dial, Touch-Tone 19
186596	Dial, Touch-Tone 20
186597	Card Set, Dialing 20,21
186598**	Faceplate 19
186599**	Faceplate 20
186600	Modification Kit 1,19
186601	Modification Kit 1,19
186602	Modification Kit 1,20
186603	Modification Kit 1,20
186627	Logic Assembly 1,14
186628	Bracket 6,8,10,26
186630	Modification Kit 1,15
186637	Card, Circuit 14
186645	Bracket 8
186647	Board, Terminal 8
186648	Transformer 8
186651	Transformer 8
186670	Modification Kit 1,25
186671	Cable Assembly 25
186672**	Faceplate 25
186674	Stayband 25
186680	Logic Assembly 25
186681	Bracket 14,25
186682	Bracket 14,15,25
186683	Key Assembly 14,25
186687	Band w/S Hook 25
186688	Block 25
186689	Cable Assembly 25
186690	Bracket Assembly, Lamp 25
186727	Clamp 14,25
186738	Insulator 30,32
186739	Cover 17
186740	Jumper, 6" Green 30,32
186741	Jumper, 9" Green 6,7,9, 26
186753	Bracket 30
186765	Power Pack 1,30,32
186766	Power Pack 1,30
186768	Bracket, Fuse 6
186772	Cover 28,30
186819	Bracket 27
187052	Cover 13
187069	Barrier 4
187070	Jumper 31
187072	Network 28
187088	Spacer 27
187089	Bracket 27,30
187090	Card Assembly, Circuit 27
187091	Plate, Base 27,30
187092	Key 27
198093	Cable Assembly 27
187094	Bracket 27
187128	Insulator 27
187129	Connector Assembly 25
187133	Set of Parts 1,30
187134	Set of Parts 1,30
187135	Bracket 26
187136	Bracket 30,32
187137	Cable Assembly 27
187140	Insulator 26
187141	Insulator 26
187156	Modification Kit 1,32
187157	Cable Assembly 32
187276	Screw w/Lockwasher 6-40 x 1-1/4 Fil 8,17
188694	Frame 28,29
188695	Bracket 28
188696	Transformer Assembly 28
188697	Transformer 28
188698	Clamp 29
188699	Cable Assembly 28
188700	Adaptor 28
188725	Label 27
188726	Label 27
188837	Plate 28
188861	Cable Assembly 28
188864	Power Supply 28
188865	Supply Assembly, Power 1,28,29
188866	Sink, Heat 29
188986	Stop, Key Button 27
192007	Terminal, Tab Type 6,10, 11,28
193040	Connector w/Guide Slot 24
193179	Lamp, 28V 11
193209	Connector, Receptacle Type 9
193438	Strip, Lap 3
193486	Modification Kit 1,21
193487	Modification Kit 1,19
193488	Modification Kit 20
193489	Modification Kit 1,21
193706	Jumper, 3" White-Orange 23
193708	Jumper, 3" Black 23
195614	Pin, Key 5,6,8,10,24,26
195618	Jumper, 5-1/4" White-Purple 5
195924	Modification Kit 1,21
195926	Modification Kit 1,21
195927	Modification Kit 20
195940	Stud 11
197028	Terminal 10
197054	Jumper, 3" Black 10
197081	Switch, 3 Positions 7,9, 16,26
197464	Diode 11
197939	Switch, Pushbutton 11
198515	Card, Circuit 4
198517	Bracket 4
198518	Bushing, Insulating 4,9, 13,17,29
198519	Insulator 4
198520	Insulator, .062" Thk 4
198521	Bracket 4
198522	Clip, Spring 4,9
198528	Bracket 5
198529	Strip, Terminal 5
198650	Key, Polarizing 9,17
198670	Screw w/Lockwasher, 6-40 x 5/16 Hex 14,30
199311	Insulator 16
199317	Relay 26

NUMERICAL INDEX (Continued)

Part Number	Description and Page Number
199397	Bracket, Fuse 6,8,10
300340	Bushing 3,11,12,26,28
301713	Connector, 2 Pt Receptacle 2,6,8,10,13,18,26, 28
302433	Button, Stud 12
302722	Capacitor, 2500 MFD 29
303810	Card, Circuit 5
303826	Card, Circuit 14
303831	Card, Circuit 25
303832	Card, Circuit 25
303833	Card, Circuit 13,15,25
303846	Card Assembly, Circuit 29
304992	Bushing, Blocking 3
305453	Transformer w/Terminals 4
305454	Transformer 4
305688	Card, Circuit 5
305689	Card, Circuit 5
311406	Terminal, Receptacle Type 13,17
311605	Connector, 25 Pt Plug 14,25
311901	Cap, Green 25
312341	Diode 31
312352	Card, Circuit 17
312813	Connector, Plug Type 32
312814	Connector, Receptacle Type 28,32
312918	Strap 25
312919	Strap, Cable 24,27
320047	Capacitor, 2 MFD 24
320408	Terminal, Spade Type 19, 20,21,24
320410	Terminal, Space Type 6,10, 13,15,23,24,31
302412	Terminal, Spade Type 4,17, 24
320416	Terminal, Ring Type 24,27
320418	Terminal, Ring Type 13 23,24,28,30,32
320420	Terminal, Ring Type 17
320423	Plate 5
321543	Bracket 17
322490	Card, Circuit 27
322491	Card, Circuit 27
322669	Card, Circuit 32
325615	Capacitor, 2500 MFD 29
326635	Network, Spark Suppression 11
327061	Lamp, 24V 14
327326	Jumper, 2-3/4" Green 13, 23
327420	Modification Kit 1,21
t3 806	Plug 14,27
327819	Terminal 28
328362	Bar, Mounting 10
328363	Bracket, Guide 11
328382	Board, Terminal 11
328383	Board, Cover 11
328389	Jumper, 8" Black 10
328390	Jumper, 8" Black 10
328391	Jumper, 6" Orange 10
328392	Jumper, 6" Orange 10
328393	Jumper, 6" Black 10
328394	Jumper, 8" Black 10
328395	Jumper, 6" Black 10
328396	Jumper, 8" White 10
328397	Jumper, 6" White 10
328398	Jumper, 6" White 10
328399	Jumper, 8" White 10
328400	Jumper, 8" Black 10
328591	Strap, Cable 6,24,27
328668	Label 27
328727	Connector, 15 Pt Plug Type 14,25,32
328733	Connector, 15 Pt Receptacle Type 14,25,28,32
328739	Plate, Switch 11
328740	Bracket, Mounting 11
328741	Post 11
328742	Switch, Rotary 10
328743	Switch, Lever 11
328808	Plate, Base 10,11
330781	Shield, Transformer 4
330782	Shield, Transformer 4,17
330793	Transformer 17
330796	Transformer 4
330906	Label, Out of Service 14,25
330923	Label, Alarm 14
331082	Screw, 4-40 x 3/8 Nylon 27
332709	Driver Assembly, Selector Magnet 1,17
333515	Shield, Transformer 17
333767	Cap, Plastic 27
333768	Button 27
333905	Label 27
334167	Network, Spark Suppression 21
334652	Insulator, Switch 7,9,26
334715	Modification Kit 27
334835	Cap, Red 27
336333	Plate, Nut 14, 25,27
336334	Collar 14,25,27
336460	Plate 15,25
336461	Post 15,25
336462	Bracket 15, 25
336464	Cable Assembly 14,25
336465	Bracket 15,25
336471	Cable Assembly 15
336493	Post 12,25
336601	Cable Assembly 14
336631	Label 14,25
336632	Label 14
336633	Label 14,25
336635	Label 14,25
336636	Label 25
336640	Label 25
336954	Screw, 4-40 x 13/64 Fil 14
336956	Stayband 14
336957	Label 14
336959	Cover 14
336960	Cover 25
336962	Timer w/Terminals 13
336983	Label 25
337992	Transformer w/Terminals 17
337995	Transformer w/Terminals 4
338949	Cap, Green 27
338997	Card, Circuit 29
340249	Label 13,28
341362**	Faceplate 25
343308	Clamp 29
343470	Label 2,6,8,10,12,18
343626	Label 27
343932	Jumper 24
343937	Connector Assembly 24
377061	Lamp 25

33 TAPE READER (UX)

PARTS

FIGURE	CONTENTS	PAGE
1	Reader Mechanism	2
2	Contact Block	3
3	Tape Feed Magnet	4
4	Reed Switch and Magnet Core	4
	Numerical Index	5

©1963 by Teletype Corporation
All rights reserved
Printed in U.S.A.

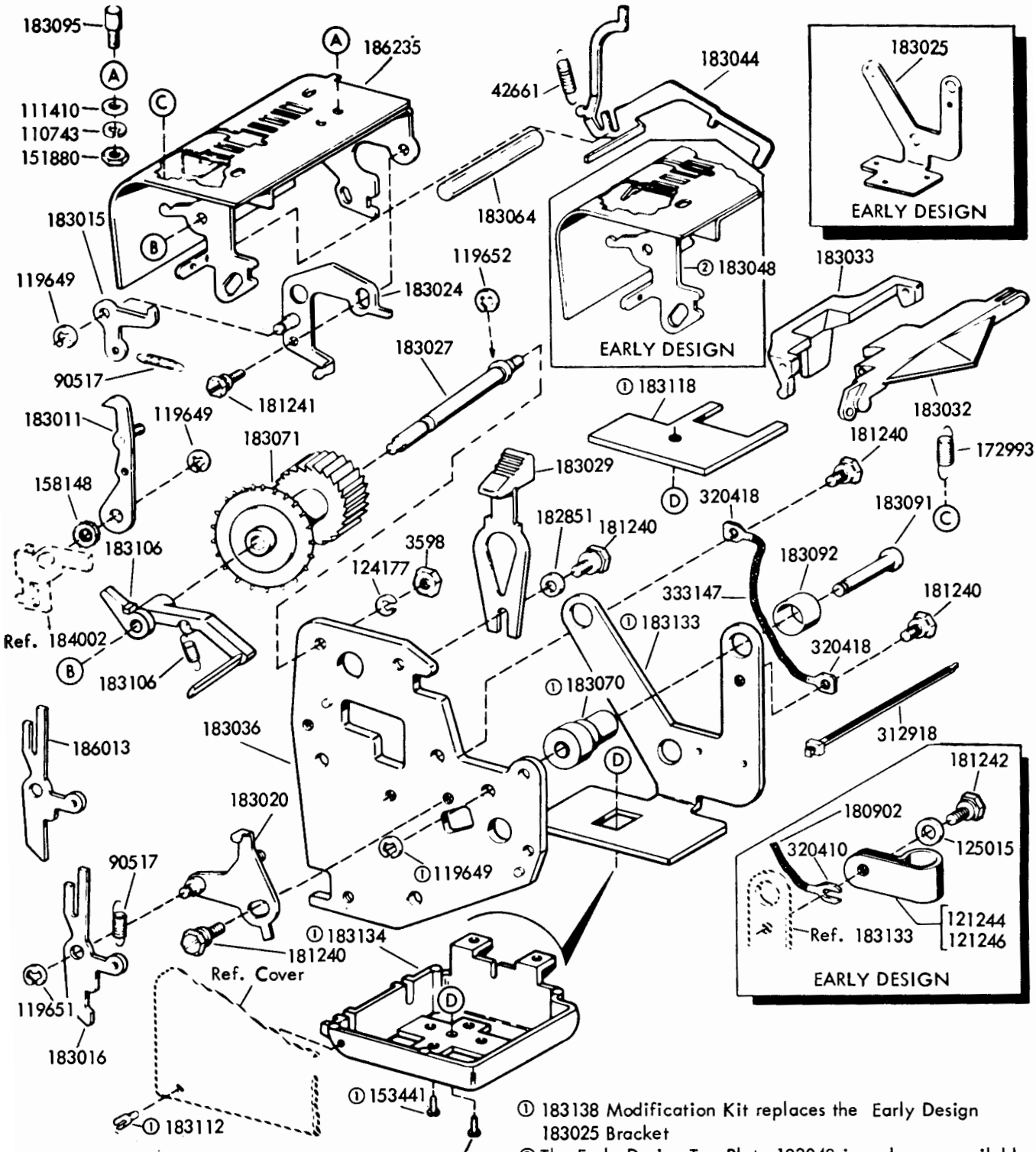

Markings Plates	Part No.
Teletype Code	181991
Pat. Pending	182251
U.S.Patents	184101
Teletype I.D.	184104

① 183138 Modification Kit replaces the Early Design 183025 Bracket

② The Early Design Top Plate 183048 is no longer available. Orders received for the 183048 Top Plate will be filled with a 186272 Set of Parts consisting of (1) 186235 Top Plate and (8) 186237 Sensing Pins. Early and Late Design Parts are not compatible. Late Design Top Plate must be used with Late Design Sensing Pins.

FIGURE 1. READER MECHANISM

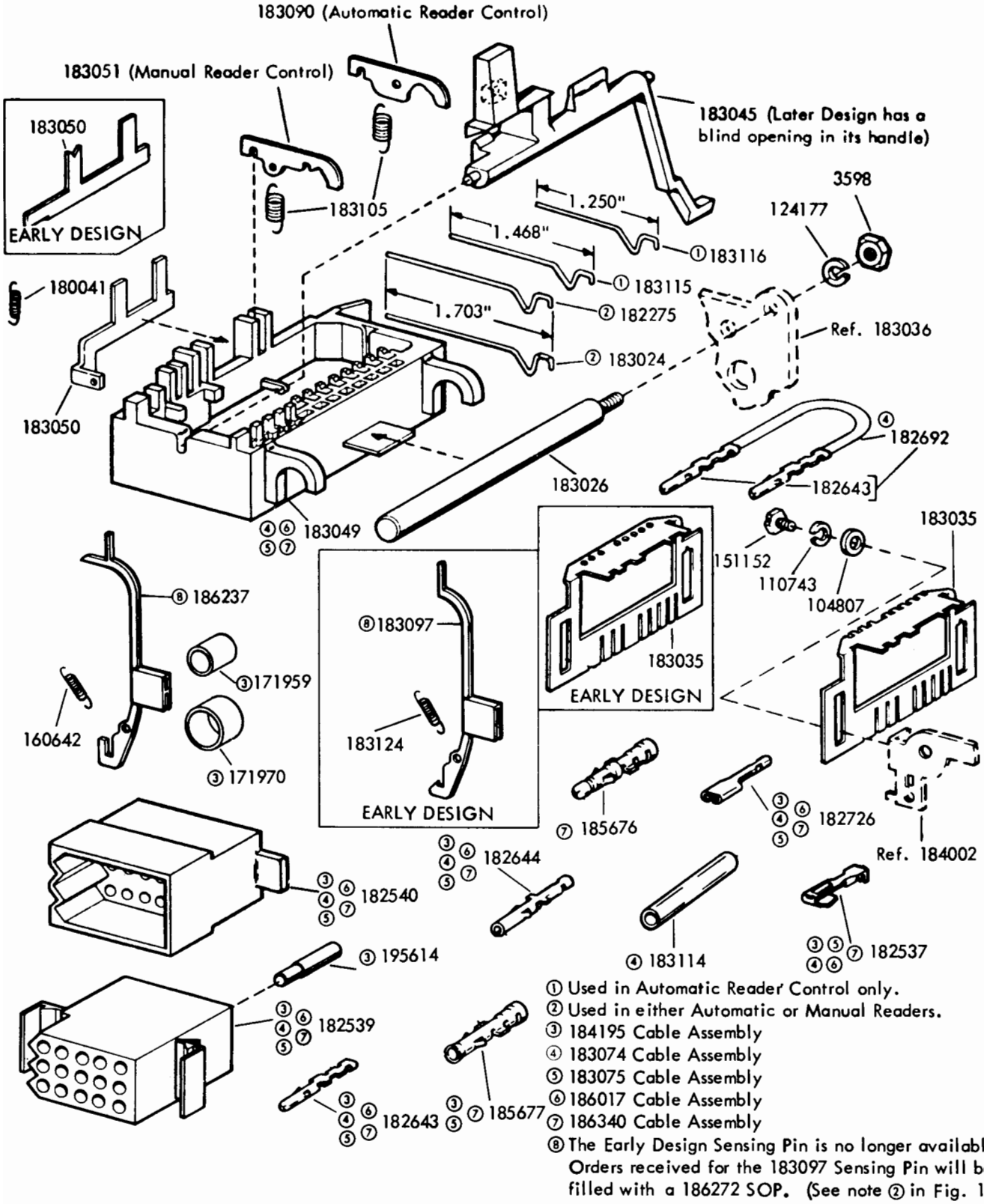

① Used in Automatic Reader Control only.
② Used in either Automatic or Manual Readers.
③ 184195 Cable Assembly
④ 183074 Cable Assembly
⑤ 183075 Cable Assembly
⑥ 186017 Cable Assembly
⑦ 186340 Cable Assembly
⑧ The Early Design Sensing Pin is no longer available. Orders received for the 183097 Sensing Pin will be filled with a 186272 SOP. (See note ② in Fig. 1)

FIGURE 2. CONTACT BLOCK

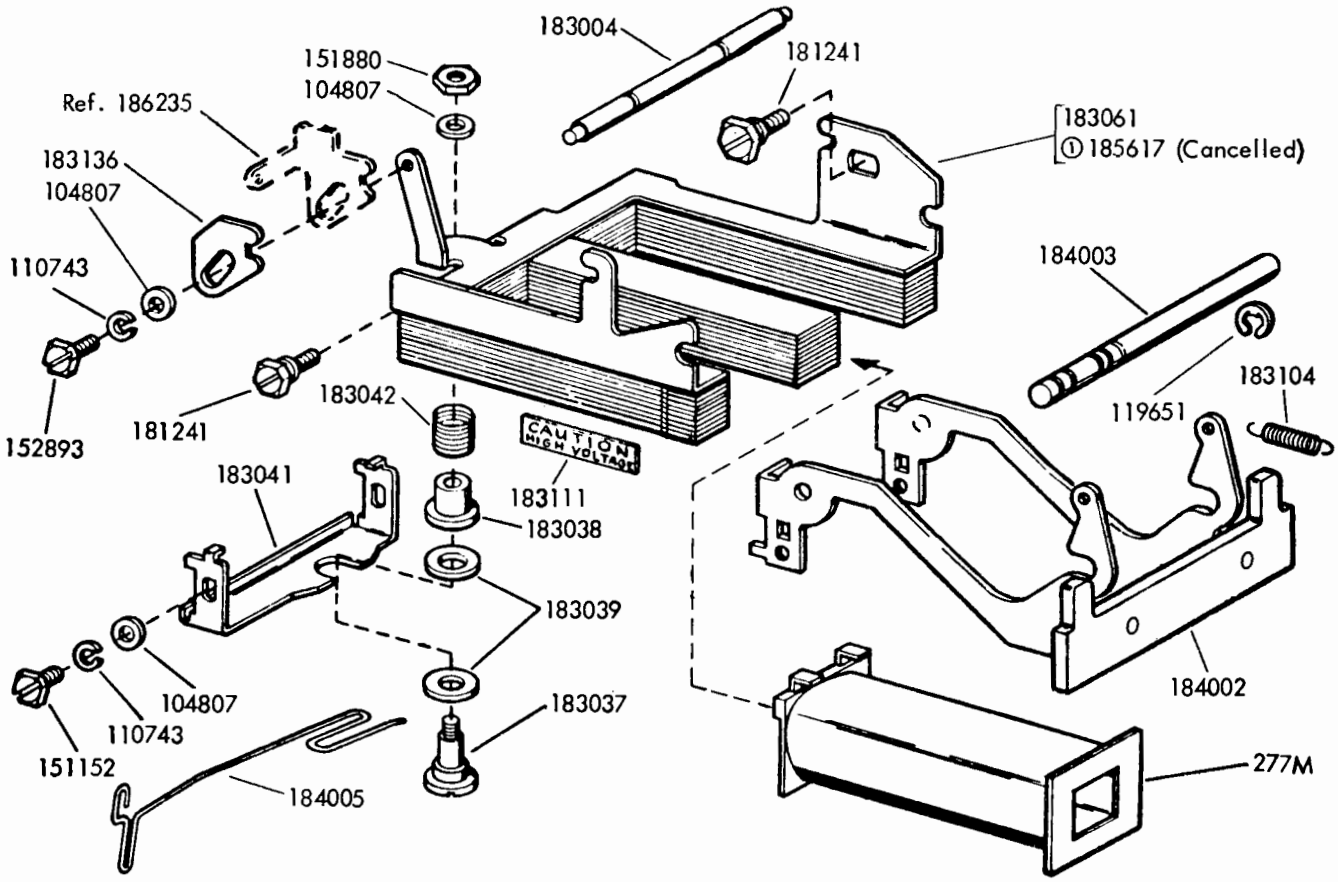

FIGURE 3. TAPE FEED MAGNET

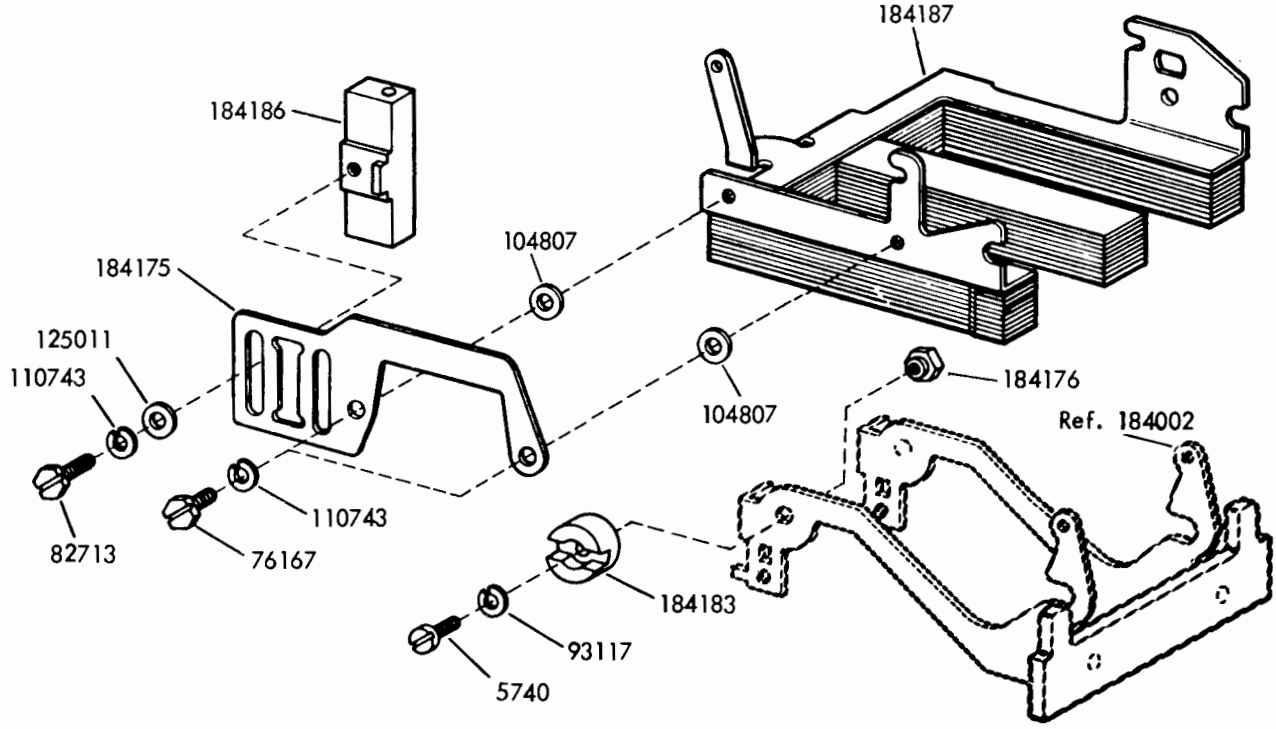

FIGURE 4. REED SWITCH AND MAGNET CORE

NUMERICAL INDEX

Part Number	Description and Page Number
277M	Coil, Magnet 4
3598	Nut, 6-40 Hex 2,3
5740	Screw, 2-56 x 1/4 Fil 4
42661	Spring 2
76167	Screw, 4-40 x 3/16 Hex 4
82713	Screw, 4-40 x 9/32 Hex 4
90517	Spring 2
93117	Lockwasher 4
104807	Washer, Flat 3,4
110743	Lockwasher 2,3,4
111410	Washer, Flat 2
119649	Ring, Retaining 2
119651	Ring, Retaining 2,4
119652	Ring, Retaining 2
121244	Clamp, 1/4 ID Cable 2
121246	Clamp, 3/8 ID Cable 2
124177	Lockwasher 2,3
125011	Washer, Flat 4
125015	Washer, Flat 2
151152	Screw, 4-40 x 3/16 Hex 3,4
151880	Nut, 4-40 Hex 2,4
152893	Screw, 4-40 x 1/4 Hex 4
153441	Screw, 10-32 x 7/16 Hex 2
158148	Washer, Felt 2
160642	Spring 3
171959	Connector, Blue Shielding 3
171970	Connector, Blue Shielding 3
172993	Spring 2
180041	Spring 3
180902	Jumper, 3-1/2" Braided 2
181240	Screw w/Lockwasher, 6-40 x 3/16 Hex 2
181241	Screw w/Lockwasher, 6-40 x 1/4 Hex 2,4
181242	Screw w/Lockwasher, 6-40 x 5/16 Hex 2
181991	Plate, Identification 2
182251	Plate, Identification 2
182275	Wire, Contact 3
182537	Terminal, Tab Type 3
182539	Connector, 15 Pt Receptacle Type 3
182540	Connector, 15 Pt Plug Type 3
182643	Terminal, Plug Type 3
182644	Terminal, Receptacle Type 3
182692	Jumper, 2-1/4" Orange 3
182726	Terminal, Receptacle Type 3
182851	Spacer, .062" Thk 2
183004	Post, Spring 4
183011	Pawl, Feed 2
183015	Lever, Detent 2
183016	Pawl, Blocking 2
183020	Bracket, Blocking Pawl 2
183024	Wire, Contact 2,3
183025	Bracket 2
183026	Post, Contact Block 3
183027	Shaft, Feed Wheel 2
183029	Latch, Spring 2
183032	Lid, Tape 2
183033	Bail, Tight Tape 2
183035	Guide, Sensing Pin 3
183036	Backplate 2,3
183037	Screw, 4-40 Shoulder 4
183038	Bushing, Upstop 4
183039	Buffer, Upstop 4
183041	Bracket, Upstop 4
183042	Spring, Compression 4
183044	Pin, Tape Out 2
183045	Lever, Start-Stop 3
183048	Plate, Top 2
183049	Block, Contact 3
183050	Bar, Common 3
183051	Lever, Detent 3
183061	Core, Magnet 4
183064	Insulator, Tape Out Pin 2
183070	Grommet, Rubber 2
183071	Wheel, Feed 2
183074	Cable Assembly 3
183075	Cable Assembly 3
183090	Lever, Detent 3
183091	Post 2
183092	Cup 2
183095	Stud, Tape Guide 2
183097	Pin, Sensing 3
183104	Spring 4
183105	Spring 3
183106	Spring 2
183111	Label 4
183112	Screw, 4-40 x 9/16 Fil 2
183114	Sleeve, Insulating 3
183115	Wire, Contact 3
183116	Wire, Contact 3
183117	Screw, 10-32 x 5/8 Hex 2
183118	Plate, Clamp 2
183124	Spring 3
183133	Bracket 2
183134	Base 2
183136	Plate 4
183138	Modification Kit 2
184002	Armature 2,3,4
184003	Shaft, Armature 4
184005	Clip, Spring 4
184101	Plate, Identification 2
184104	Plate, Identification 2
184175	Bracket 4
184176	Nut, 2-56 Shoulder Hex 4
184183	Magnet 4
184186	Switch, Reed 4
184187	Core, Magnet 4
184195	Cable Assembly 3
185617	Core, Magnet 4
185676	Terminal, Plug Type 3
185677	Terminal, Receptacle Type 3
186013	Pawl, Blocking 2
186017	Cable Assembly 3
186235	Plate, Top 2,4
186237	Pin, Sensing 2,3
186272	Set of Parts 2,3
186340	Cable Assembly 3
195614	Pin, Key 3
312918	Strap 2
320410	Terminal, Spade Type 2
320418	Terminal, Ring Type 2
333147	Jumper, 1-3/4" Braided 2

33 TAPE PUNCH (UPE)

PARTS

FIGURE	CONTENTS	PAGE
1	Punch Mechanism	2
2	Punch Mechanism (Continued)	3
3	Punch Mechanism (Continued)	4
4	Power Bail Mechanisms	5
	Numerical Index	6

© 1963 and 1965 by Teletype Corporation
All rights reserved
Printed in U.S.A.

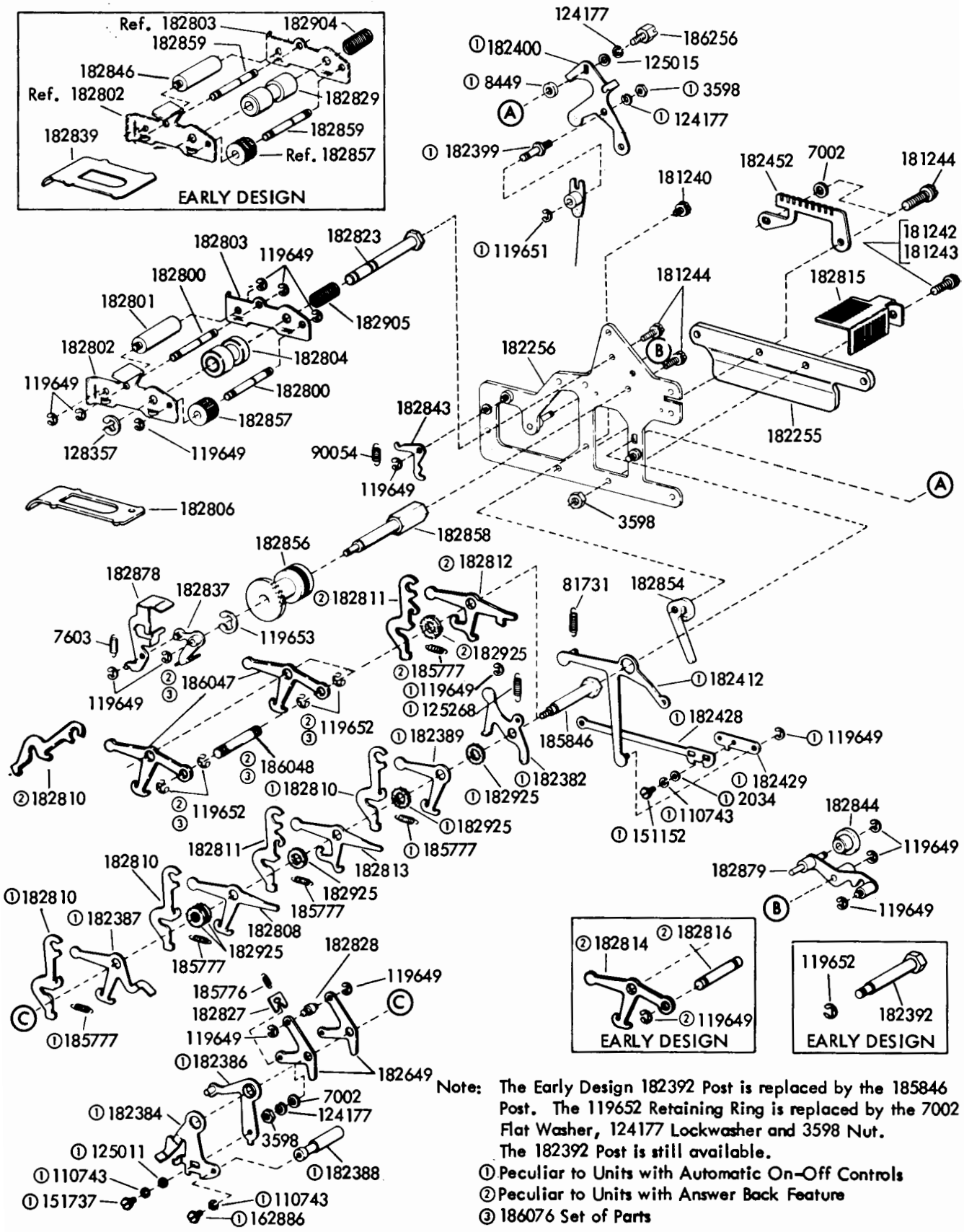

Note: The Early Design 182392 Post is replaced by the 185846 Post. The 119652 Retaining Ring is replaced by the 7002 Flat Washer, 124177 Lockwasher and 3598 Nut. The 182392 Post is still available.

① Peculiar to Units with Automatic On-Off Controls
② Peculiar to Units with Answer Back Feature
③ 186076 Set of Parts

FIGURE 1. PUNCH MECHANISM

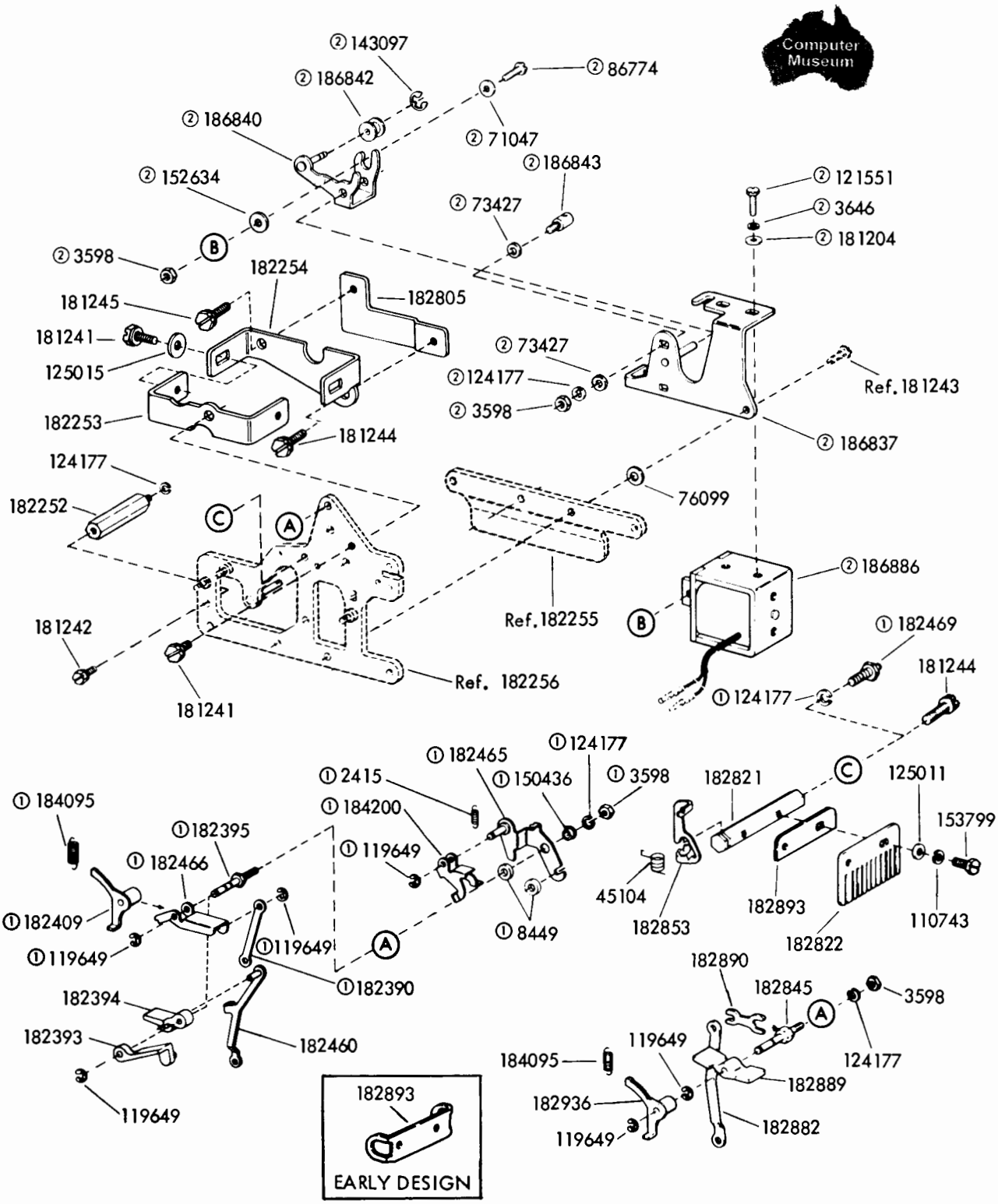

① Peculiar to Units with Automatic ON-OFF Controls
② 186799 Solenoid Assembly

FIGURE 2. PUNCH MECHANISM (Continued)

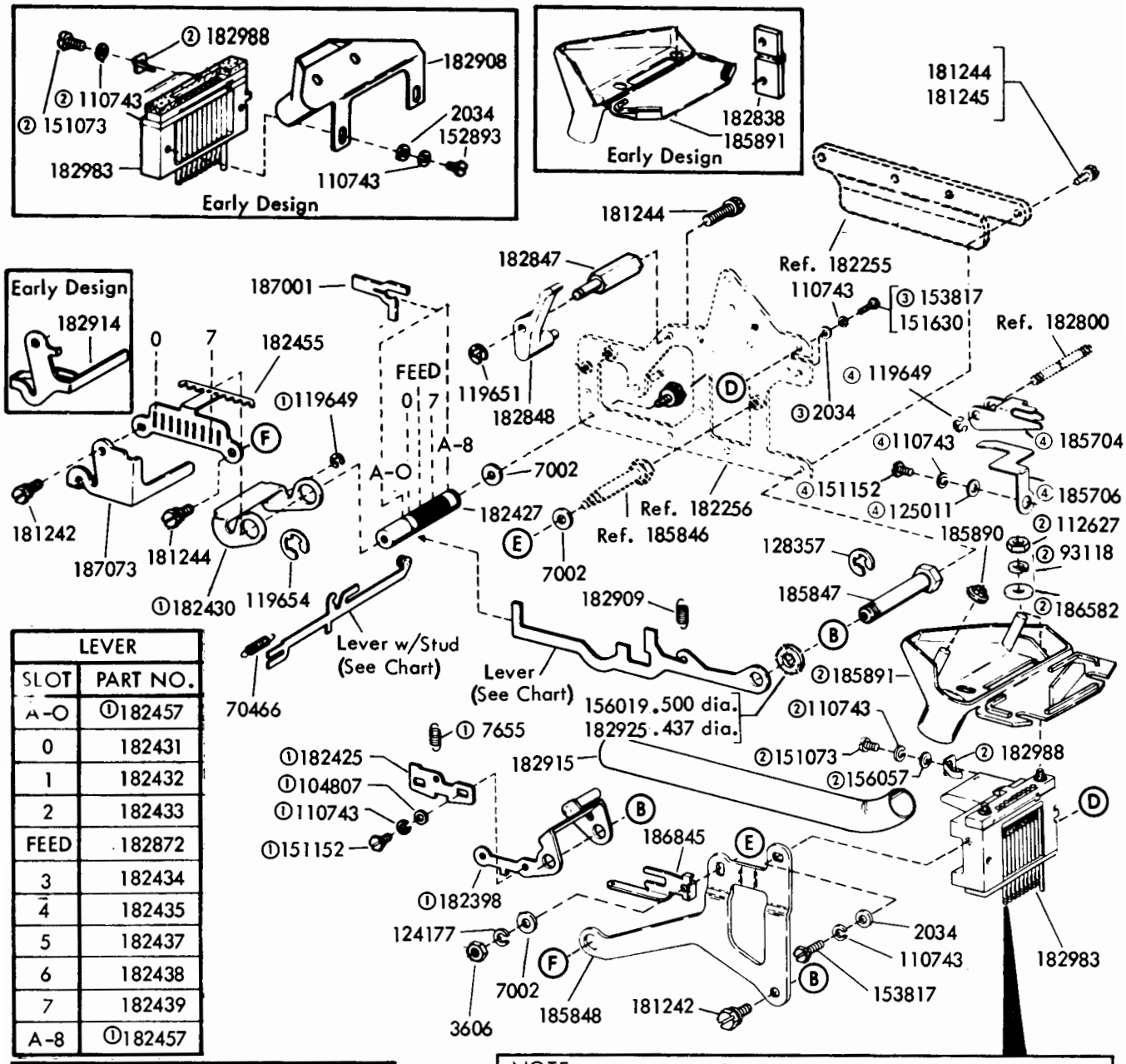

LEVER	
SLOT	PART NO.
A-O	①182457
0	182431
1	182432
2	182433
FEED	182872
3	182434
4	182435
5	182437
6	182438
7	182439
A-8	①182457

LEVER W/STUD		LEVER W/STUD	
SLOT	PART NO.	SLOT	PART NO.
0	182862	1	①182403
1-8	182884	2	①182402
2-8	182885	3	①182404
3	182864	4	①182864
4-8	182886	5	①182406
6	182887	6	①182887
5	182861	7	①182861
7	182888	8	①182888

NOTE: "Due to special assembly processes, it is recommended that the Teletype Product Service Organization be contacted to determine if part replacement or repair is possible on this portion of the Punch Block Assembly."

NOTE: Early and Later Design Punch Block Assemblies are interchangeable; however, the 182908 Chad Chute can only be used on the Early Design and the 185891 can only be used on the Later Design.

① Peculiar to units with Automatic On-Off Controls
② Supplied with 182983
③ Peculiar to units with Manual On-Off Controls
④ 185705 Modification Kit to provide a guide for Fan Fold Tape

FIGURE 3. PUNCH MECHANISM (Continued)

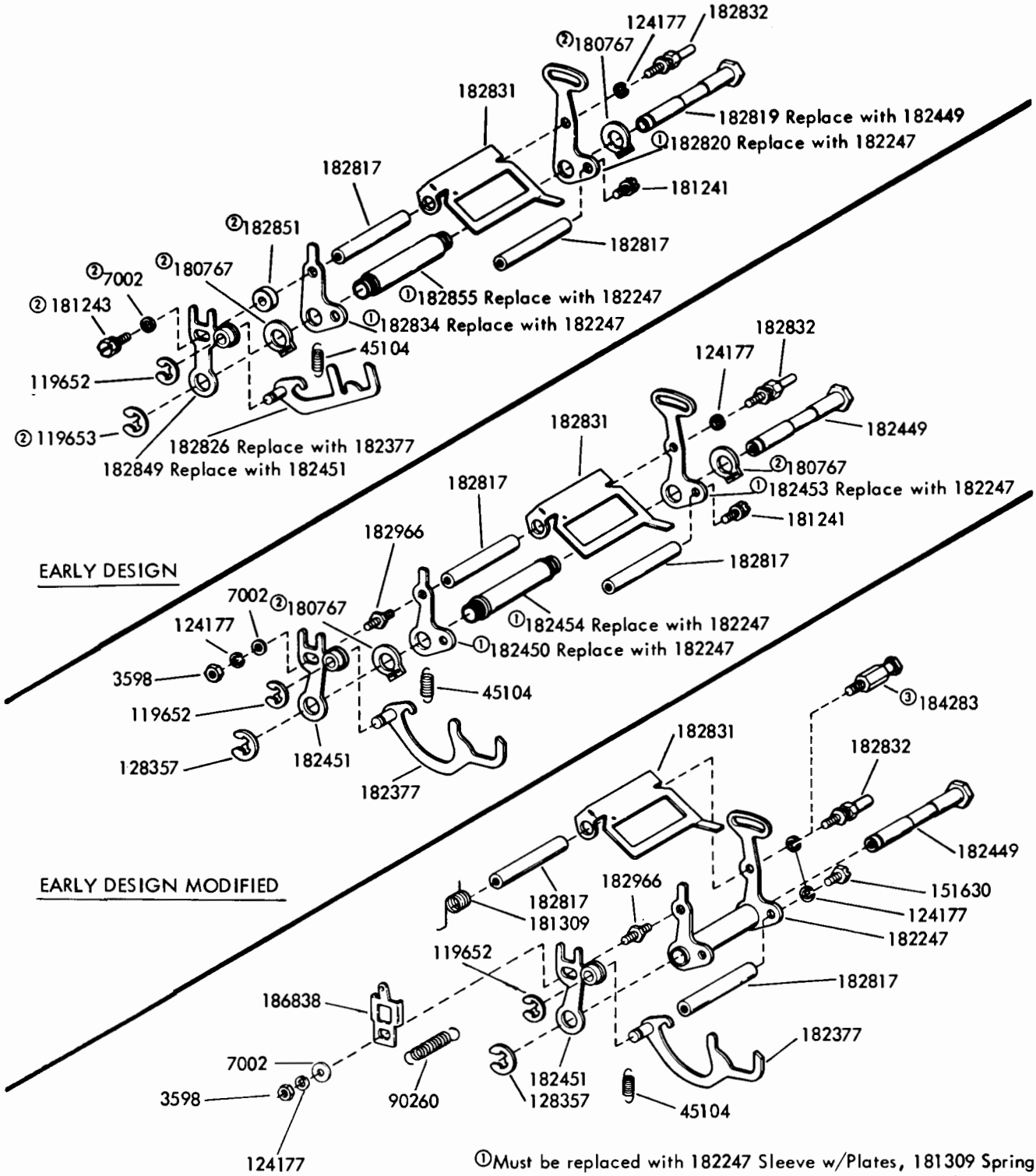

FIGURE 4. POWER BAIL MECHANISMS

NUMERICAL INDEX

Part Number	Description and Page Number
2034	Washer, Flat 2,4
2415	Spring 3
3598	Nut, 6-40 Hex 2,3,5
3606	Nut, 6-40 Hex 4
3646	Lockwasher 3
7002	Washer, Flat 2,4,5
7603	Spring 2
7655	Spring 4
8449	Spacer, 0.094" Thk 2,3
45104	Spring 3,5
70466	Spring 4
71047	Washer, Flat 3
73427	Washer, Flat 3
76099	Washer, Flat 3
81731	Spring 2
86774	Screw, 6-40 Shoulder 3
90054	Spring 2
90260	Spring 5
93118	Lockwasher 4
104807	Washer, Flat 4
110743	Lockwasher 2,3,4
112627	Nut, 2-56 Hex 4
119649	Ring, Retaining 2,3,4
119651	Ring, Retaining 2,4
119652	Ring, Retaining 2,5
119653	Ring, Retaining 2,5
119654	Ring, Retaining 4
121551	Screw, 8-32 x 1/4 Hex 3
124177	Lockwasher 2 to 5
125011	Washer, Flat 2,3,4
125015	Washer, Flat 2,3
125268	Spring 2
128357	Ring, Retaining 2,4,5
143097	Ring, Retaining 3
150436	Bushing 3
151073	Screw, 4-40 x 5/32 Fil 4
151152	Screw, 4-40 x 3/16 Hex 2,4
151630	Screw, 6-40 x 1/4 Hex 4,5
151737	Screw, 4-40 x 11/64 Hex 2
152634	Bracket 3
152893	Screw, 4-40 x 1/4 Hex 4
153817	Screw, 4-40 x 3/8 Hex 4
153799	Screw, 4-40 x 21/64 Hex 3
156019	Washer, Felt 4
156057	Washer, Flat 4
162886	Screw, 4-40 x 7/32 Hex 2
180767	Ring, Retaining 5
181204	Washer, Flat 3
181240	Screw w/Lockwasher, 6-40 x 3/16 Hex 2
181241	Screw w/Lockwasher, 6-40 x 1/4 Hex 3,5
181242	Screw w/Lockwasher, 6-40 x 5/16 Hex 2,3,4
181243	Screw w/Lockeasher, 6-40 x 3/8 Hex 2,3,5
181244	Screw w/Lockwasher, 6-40 x 7/16 Hex 2,3,4
181245	Screw w/Lockwasher, 6-40 x 1/2 Hex 3,4
181309	Spring, Torsion 5
182247	Sleeve w/Plates 5
182252	Post 3
182253	Bracket 3
182254	Bracket 3
182255	Spacer 2,3,4
182256	Plate 2,3,4
182377	Pawl w/Stud 5
182382	Lever 2
182384	Lever 2
182386	Lever 2
182387	Lever 2
182388	Post 2
182389	Lever 2
182390	Link 3
182392	Post 2
182393	Lever 3
182394	Lever 3
182395	Post 3
182398	Bail w/Post 4
182399	Post, Eccentric 2
182400	Plate w/Stud 2
182402	Lever w/Stud 4
182403	Lever w/Stud 4
182404	Lever w/Stud 4
182406	Lever w/Stud 4
182409	Arm w/Hub 3
182412	Lever w/Stud 2
182425	Arm 4
182427	Post 4
182428	Link 2
182429	Plate 2
182430	Bail w/Stud 4
182431	Lever 4
182432	Lever 4
182433	Lever 4
182434	Lever 4
182435	Lever 4
182437	Lever 4
182438	Lever 4
182439	Lever 4
182449	Post 5
182450	Plate 5
182451	Plate w/Bushing 5
182452	Guideplate 2
182453	Plate 5
182454	Sleeve 5
182455	Bracket 4
182457	Lever 4
182460	Link 3
182465	Bracket 3
182466	Lever w/Post 3
182469	Post, Spring 3
182649	Connector, 6 Pt Receptacle Type 2
182800	Post 2,4
182801	Roller 2
182802	Bracket 2
182803	Plate 2
182804	Sleeve 2
182805	Plate 3
182806	Plate 2
182808	Lever 2
182810	Pawl 2
182811	Pawl 2
182812	Lever 2
182813	Lever 2
182814	Lever 2
182815	Bracket 2
182816	Shaft 2
182817	Post 5
182819	Post 5
182820	Plate 5
182821	Post 3
182822	Plate 3
182823	Post 2
182826	Pawl w/Stud 5
182827	Plate 2
182828	Roller 2
182829	Sleeve 2
182831	Bail 5
182832	Post 5
182834	Plate 5
182837	Lever w/Post 2
182838	Spacer 4

NUMERICAL INDEX (Continued)

Part Number	Description and Page Number
182839	Plate 2
182843	Lever 2
182844	Roller 2
182845	Post 3
182846	Roller 2
182847	Post 4
182848	Arm 4
182849	Plate w/Bushing 5
182851	Spacer, 0.062" Thk 5
182853	Hook 3
182854	Bracket 2
182855	Sleeve 5
182856	Wheel, 24T 2
182857	Roller 2
182858	Post 2
182859	Post 2
182861	Lever w/Stud 4
182862	Lever w/Stud 4
182864	Lever w/Stud 4
182872	Lever 4
182878	Lever 2
182879	Lever 2
182882	Link 3
192884	Lever w/Stud 4
182885	Lever w/Stud 4
182886	Lever w/Stud 4
182887	Lever w/Stud 4
182888	Lever w/Stud 4
182889	Lever 3
182890	Plate 3
182893	Bracket 3
182904	Spring, Compression 2
182905	Spring, Compression 2
182908	Chute, Chad 4
182909	Spring 4
182914	Bracket 4
182915	Extension 4
182925	Washer, Flat 2,4
182936	Arm w/Bushing 3
182966	Stud 5
182983	Block Assembly, Punch 4
182988	Spring, Punch Block 4
184095	Spring 3
184200	Bail 3
184283	Guidepost 5
185704	Depressor, Tape 4
185705	Modification Kit 4
185706	Bracket 4
185776	Spring 2
185777	Spring 2
185846	Post 2,4
185847	Post 4
185848	Plate 4
185890	Pushnut 4
185891	Chute, Chad 4
186047	Lever 2
186048	Shaft 2
186076	Set of Parts 2
186256	Screw, 6-40 Spl 2
186582	Washer, Flat 4
186799	Solenoid Assembly 3
186837	Plate w/Post 3
186838	Bracket, Spring 5
186840	Bail w/Post 3
186842	Roller 3
186843	Post, Stop 3
186845	Bracket, Spring 4
186886	Solenoid Assembly 3
187001	Stop 4
187073	Bracket 4

33 COVER AND TABLE

PARTS

FIGURE	CONTENTS	PAGE
1	Printer Covers	2
2	Punch Cover and Base	3
3	Reader Cover and Base	4
4	Faceplates	5
5	Faceplates (Continued)	6
6	Cover and Tape Storage Bin	7
7	Cabinet	8
8	Lid and Copyholder	9
9	183976 Adjustable Copyholder Assembly	10
10	Subbases	11
11	184074 Outlet Box Assembly	12
12	183859 Modification Kit to Provide Paper Supply and Accumulating Shelf	13
13	186031 Rectifier Assembly	14
14	186226 Modification Kit to Provide Mobility for Cabinet	15
	Numerical Index	16

**Denotes a painted part.
HF-Light Olive Gray Smooth Vinyl

© 1965 by Teletype Corporation
All rights reserved
Printed in U.S.A.

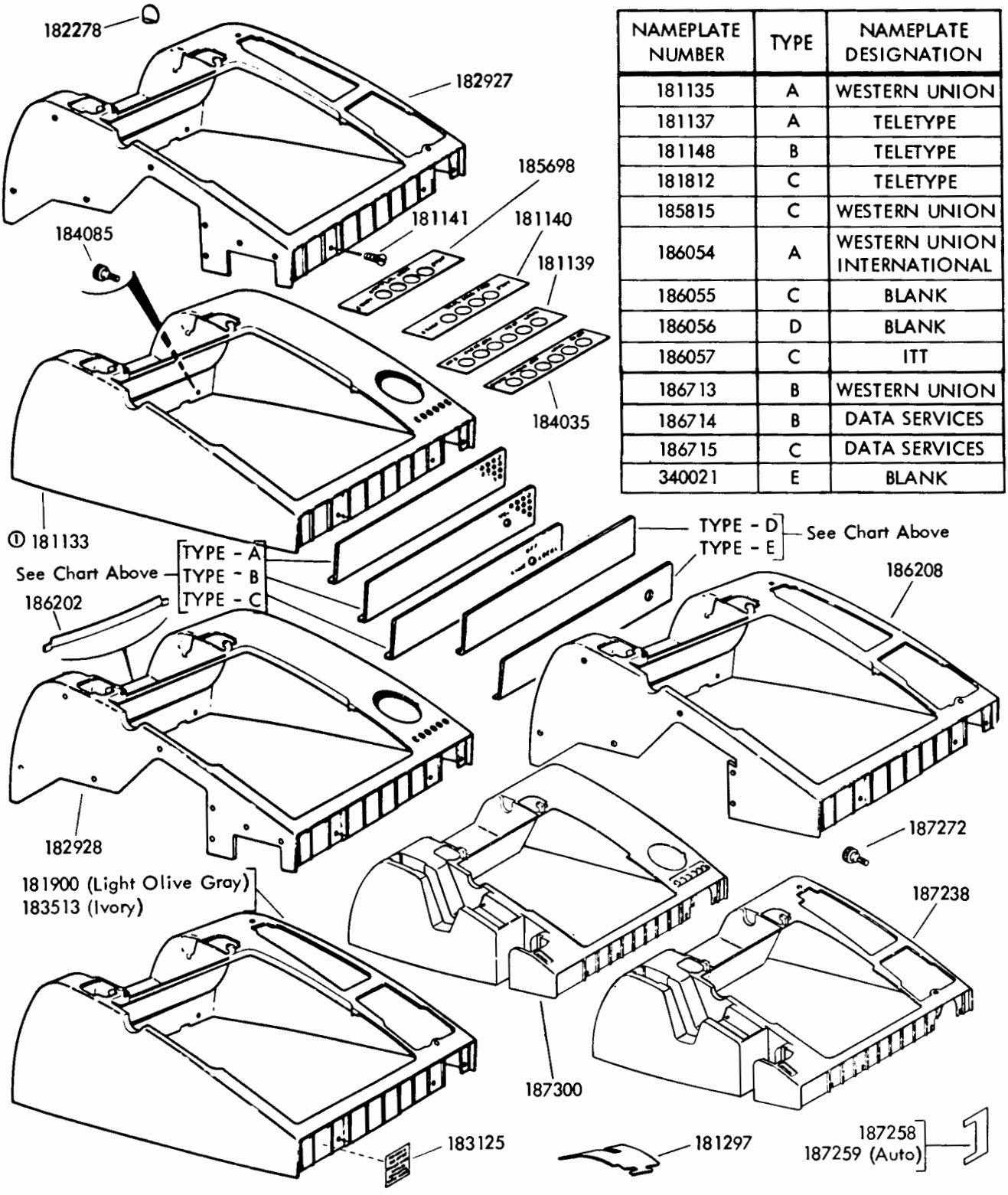

NAMEPLATE NUMBER	TYPE	NAMEPLATE DESIGNATION
181135	A	WESTERN UNION
181137	A	TELETYPE
181148	B	TELETYPE
181812	C	TELETYPE
185815	C	WESTERN UNION
186054	A	WESTERN UNION INTERNATIONAL
186055	C	BLANK
186056	D	BLANK
186057	C	ITT
186713	B	WESTERN UNION
186714	B	DATA SERVICES
186715	C	DATA SERVICES
340021	E	BLANK

FIGURE 1. PRINTER COVERS

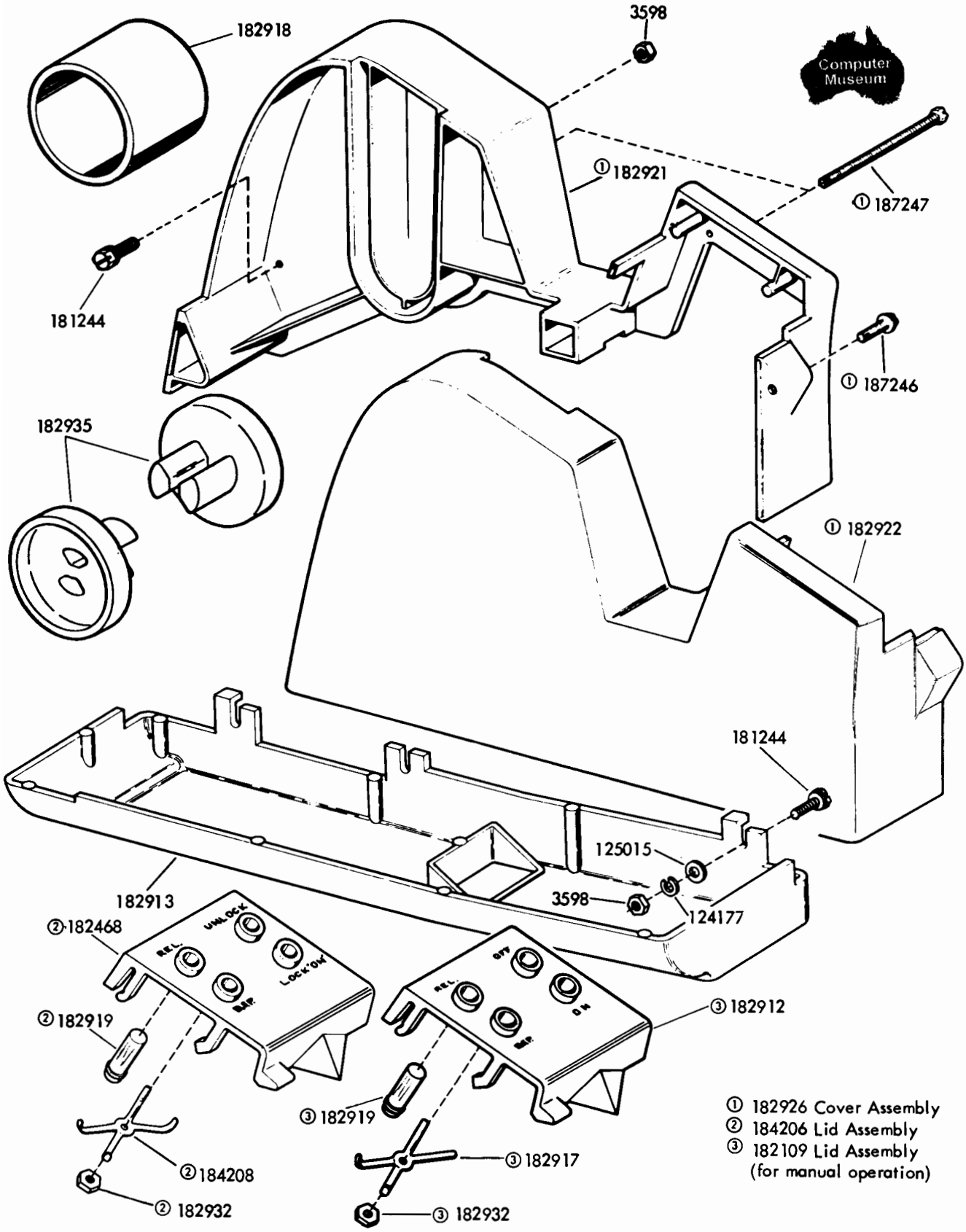

FIGURE 2. PUNCH COVER AND BASE

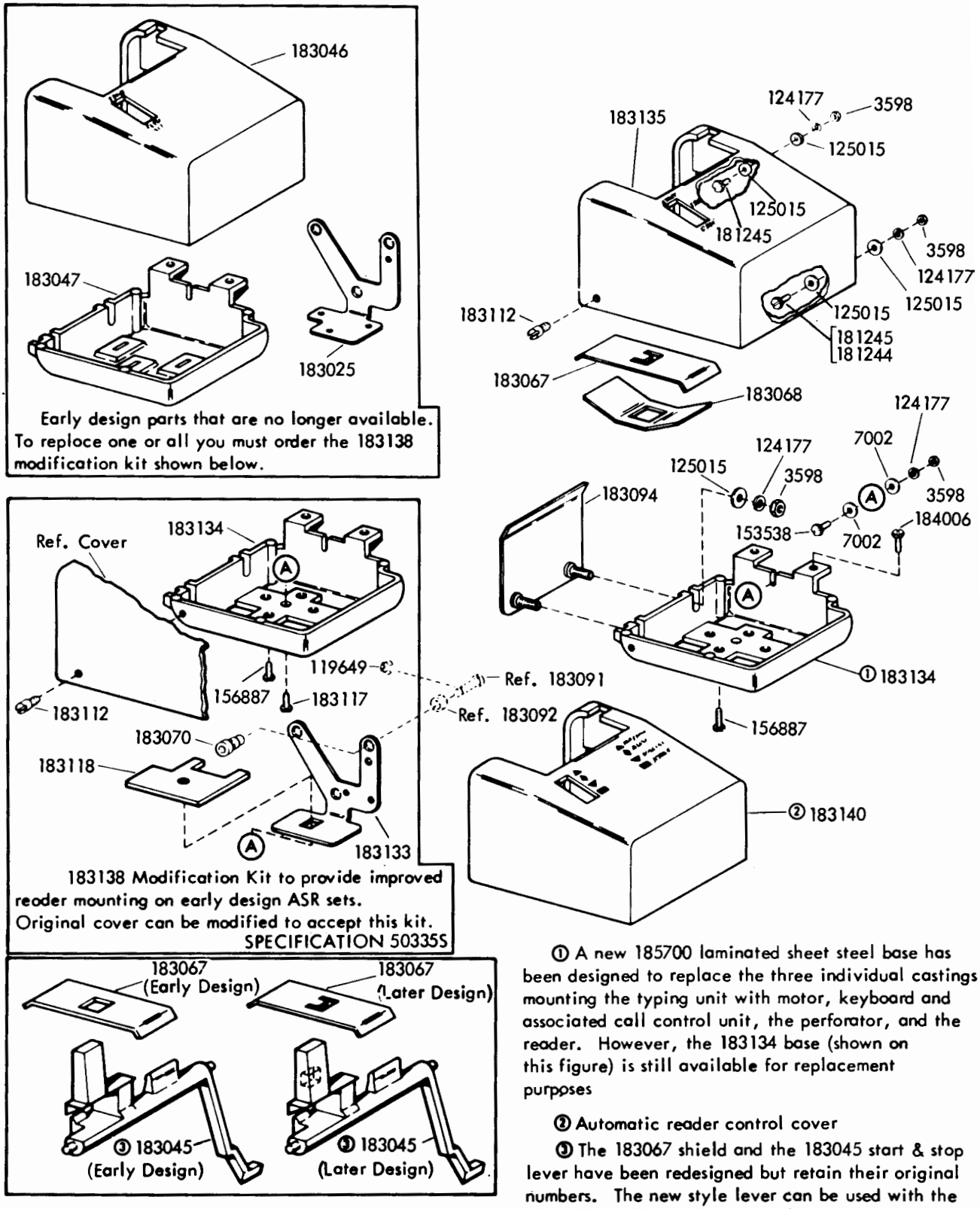

① A new 185700 laminated sheet steel base has been designed to replace the three individual castings mounting the typing unit with motor, keyboard and associated call control unit, the perforator, and the reader. However, the 183134 base (shown on this figure) is still available for replacement purposes

② Automatic reader control cover

③ The 183067 shield and the 183045 start & stop lever have been redesigned but retain their original numbers. The new style lever can be used with the old style shield but the new style shield must be used with the new style lever

FIGURE 3. READER COVER AND BASE

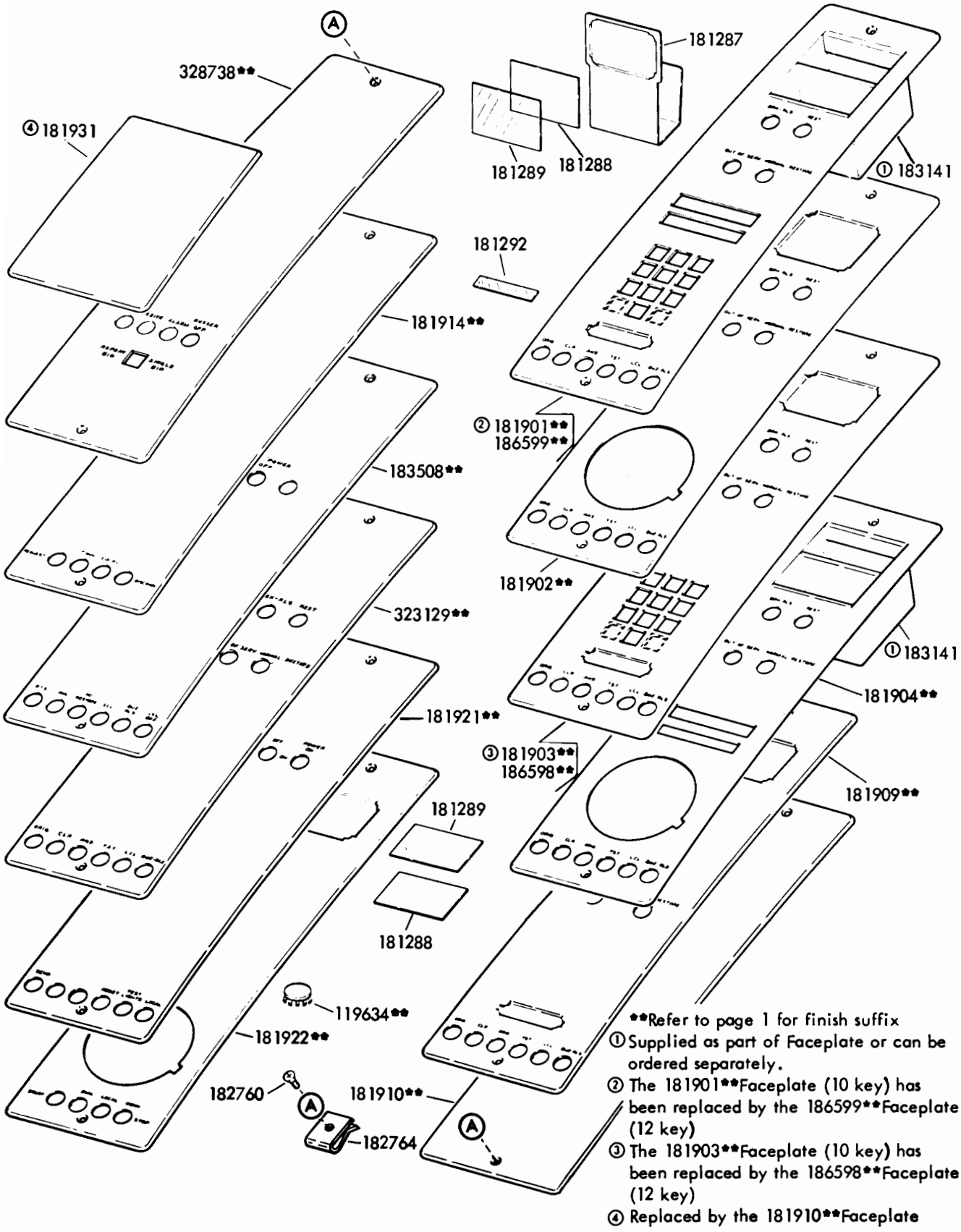

FIGURE 4. FACEPLATES

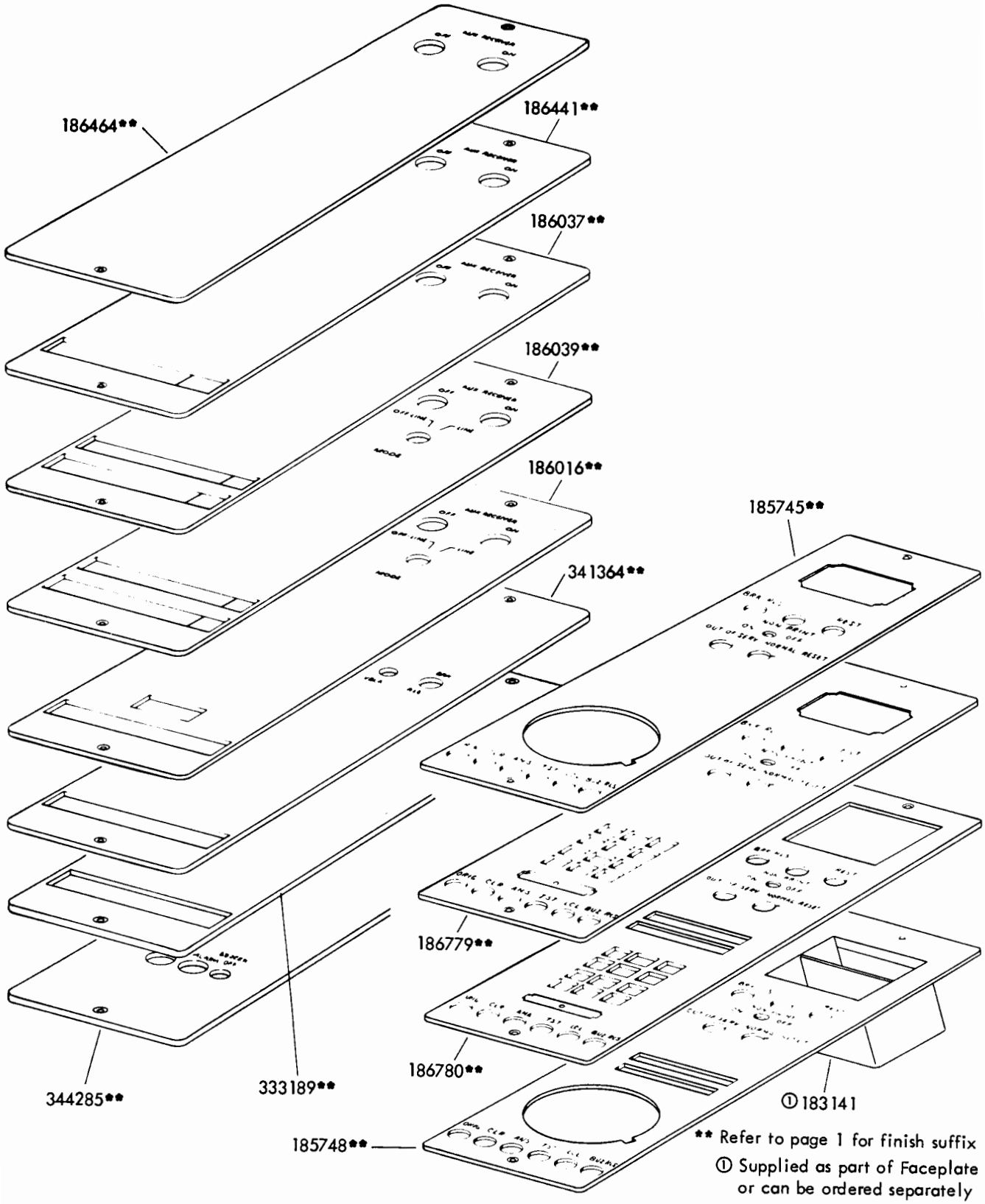

FIGURE 5. FACEPLATES (Continued)

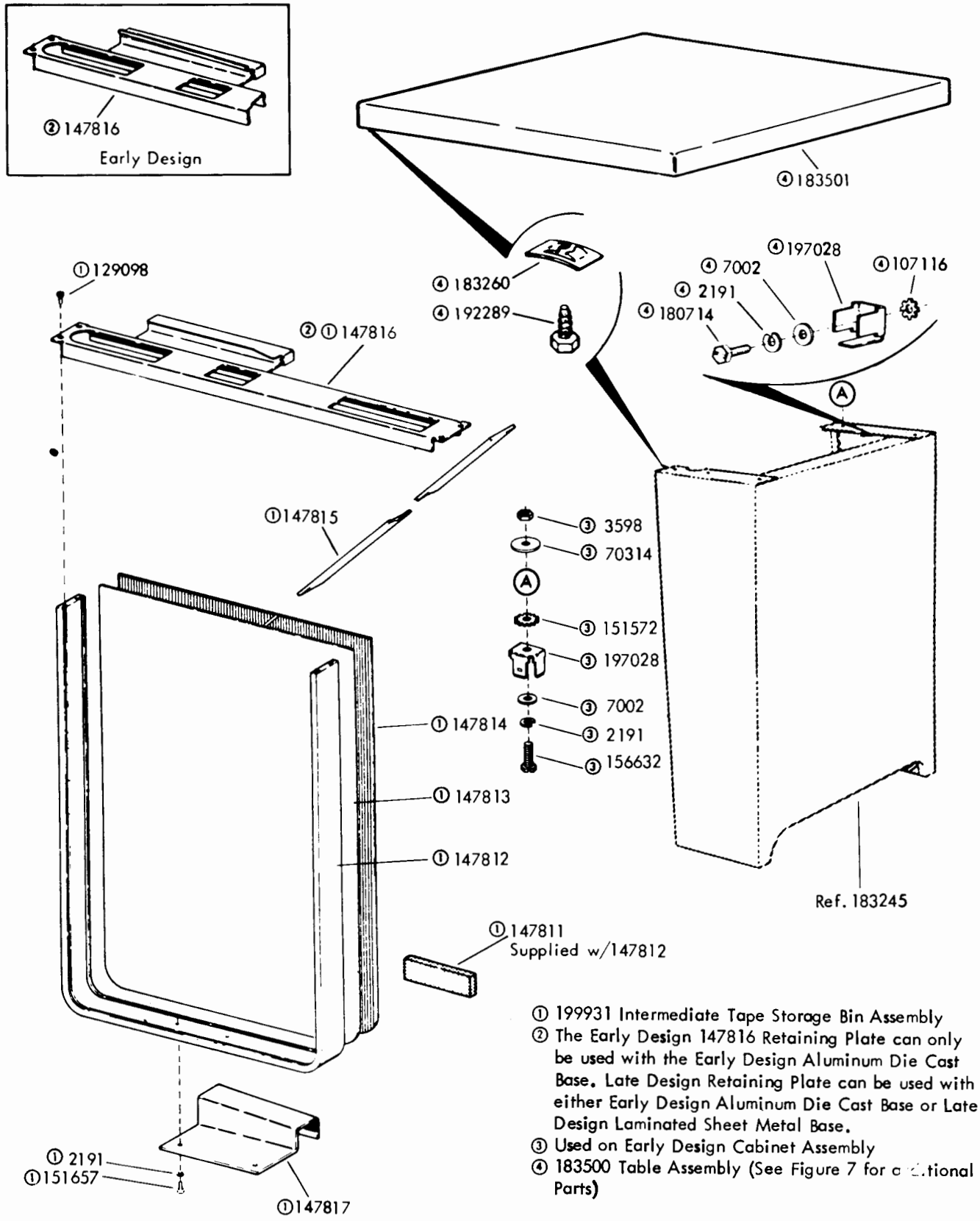

FIGURE 6. COVER AND TAPE STORAGE BIN

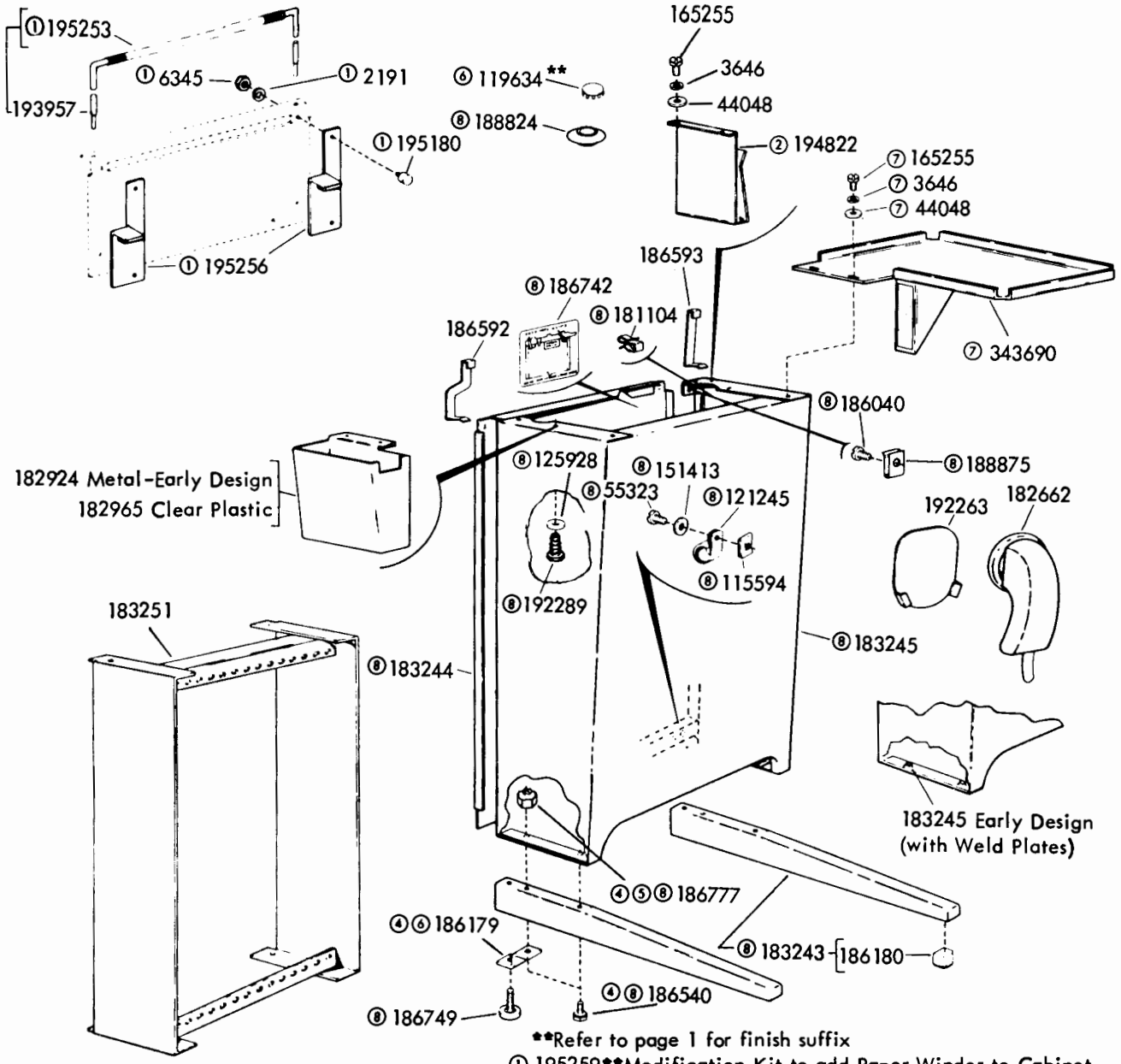

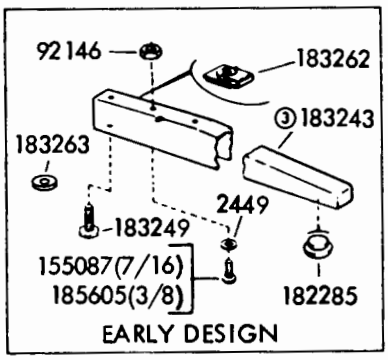

**Refer to page 1 for finish suffix

① 195259**Modification Kit to add Paper Winder to Cabinet

② The 194822 Directory Holder has been changed by including two 6 inch strips of double sided adhesive backed tape, eliminating the need for mounting hardware.

③ The Early Design 183243 Foot w/Brackets is no longer available. When replacing an Early Design Foot w/Brackets, order the 186203 Set of Parts.

④ 186203 Set of Parts to provide replacement Foot w/Bumper

⑤ The 186777 self-locking nut cannot be used on Early Design 183245 lower cabinets (With Weldplates)

⑥ Replaced by 188824

⑦ 343691**Modification Kit to Provide a Shelf

⑧ 183500 Table Assembly (See Figure 6 for additional Parts)

FIGURE 7. CABINETS

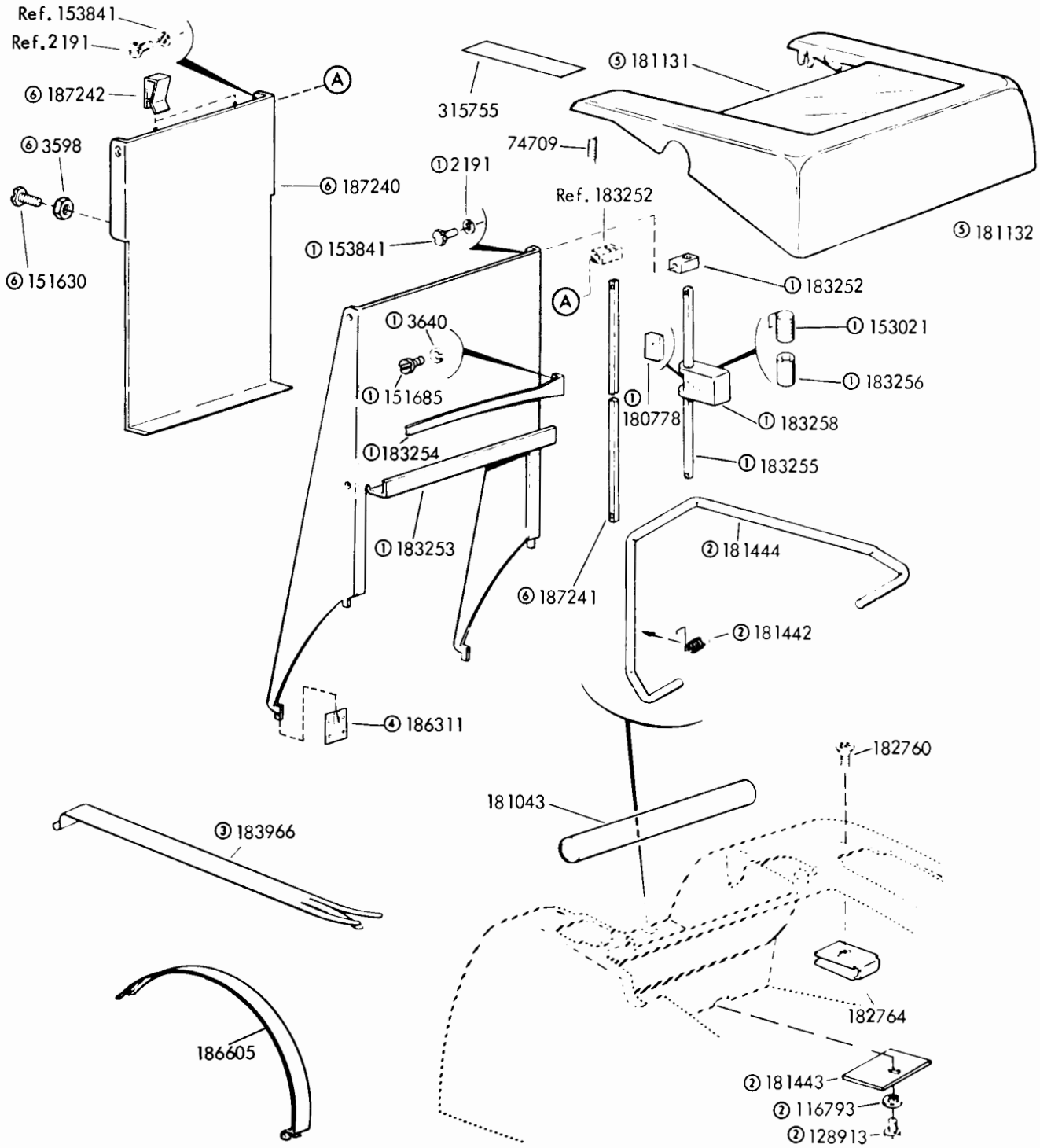

① 182036 Copyholder Assembly
② Used with Sets having Low Paper Alarm
③ No longer available. Order 186605 Paper Deflector
④ 186312 SOP to Provide Cover Repair Bracket for Copyholder
⑤ The 181131 Lid Window has been redesigned by adding nine holes to enable heat staking to the Lid rather than cementing as on the Early Design. Early and Late Design Lids w/Window are interchangeable. If however, a Late Design Lid w/Window needs a replacement Window, a 181132 Lid w/Window must be ordered.
⑥ 187239 Modification Kit to Extend Copyholder.

FIGURE 8. LID AND COPYHOLDER

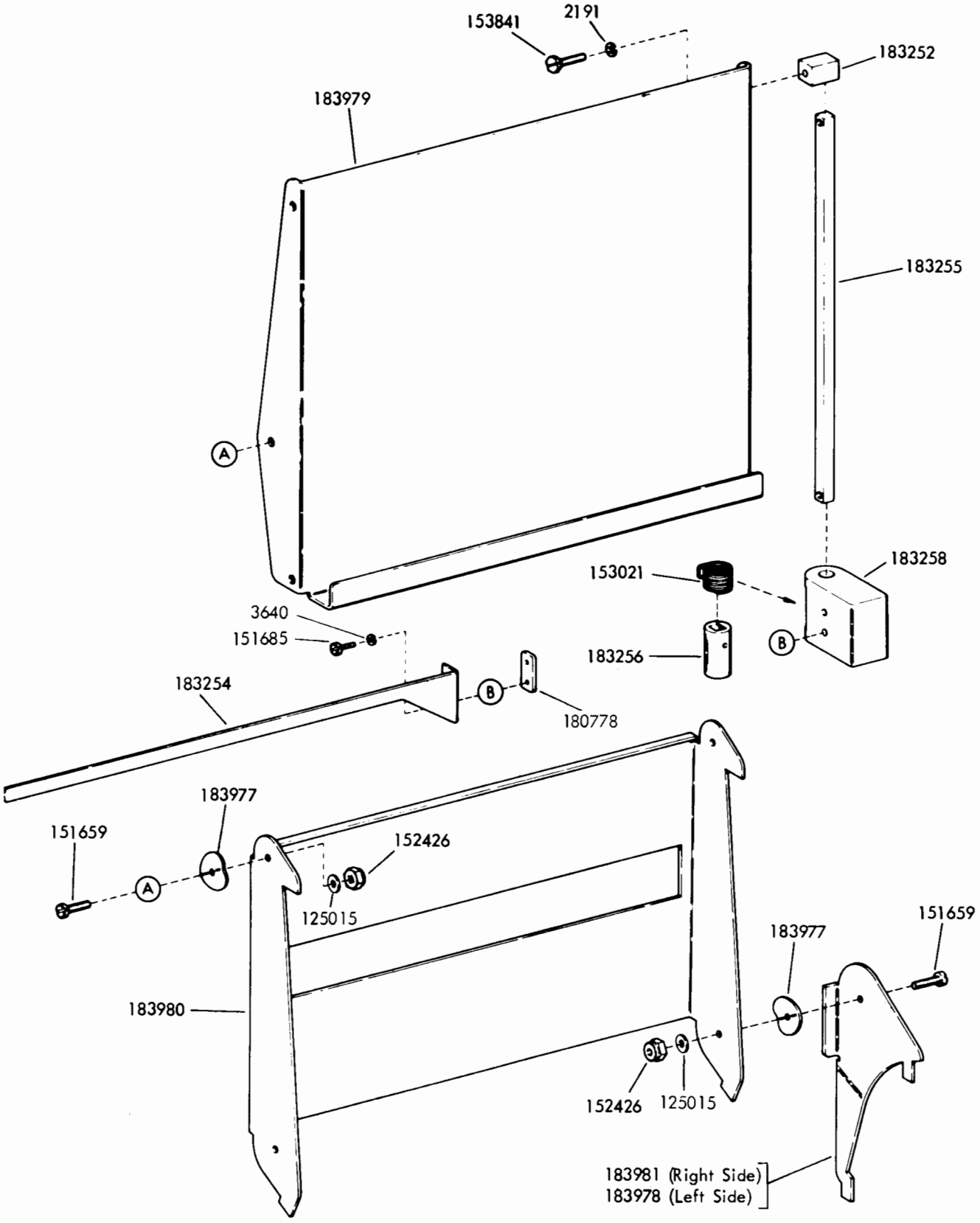

FIGURE 9. 183976 ADJUSTABLE COPYHOLDER ASSEMBLY

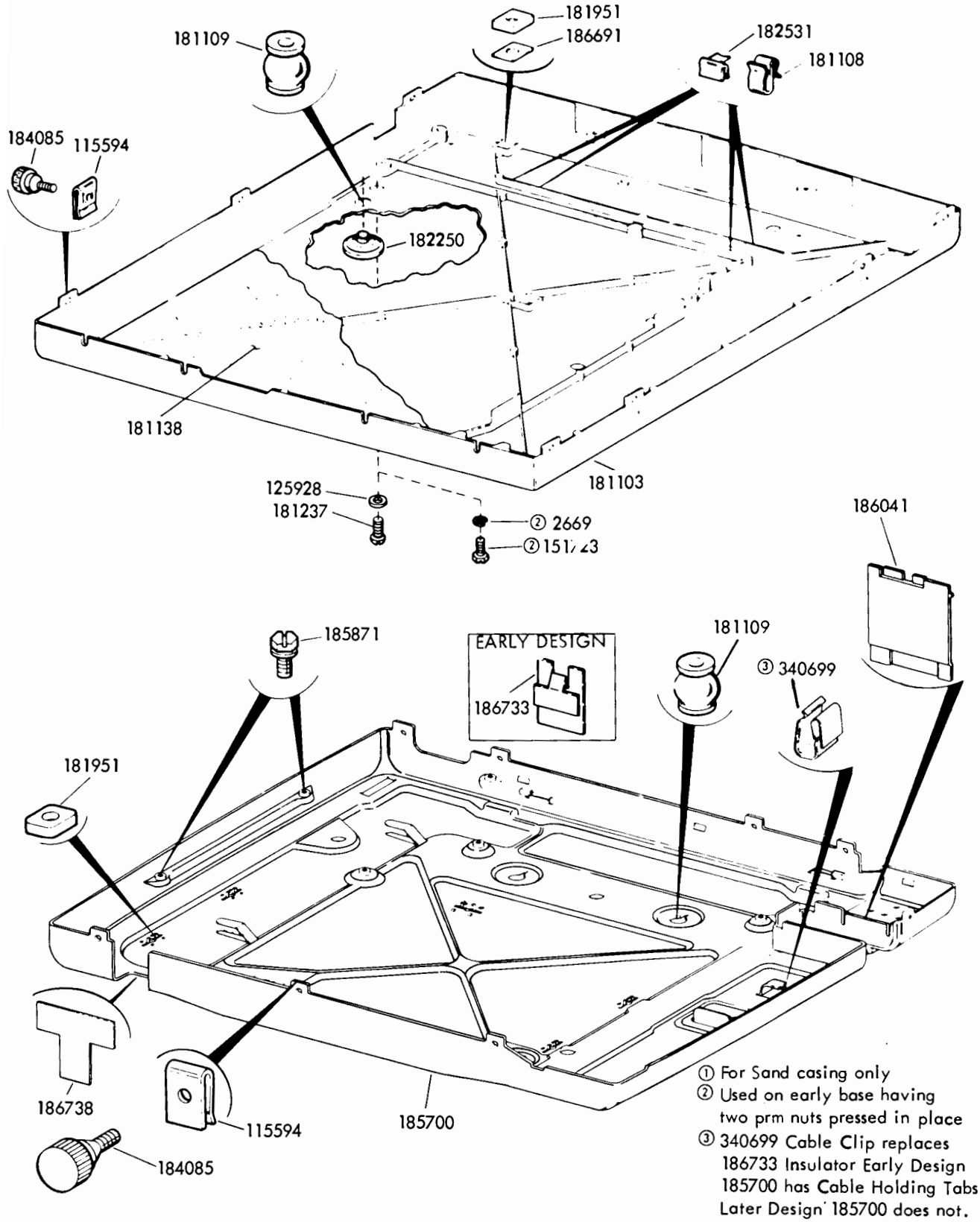

FIGURE 10. SUBBASES

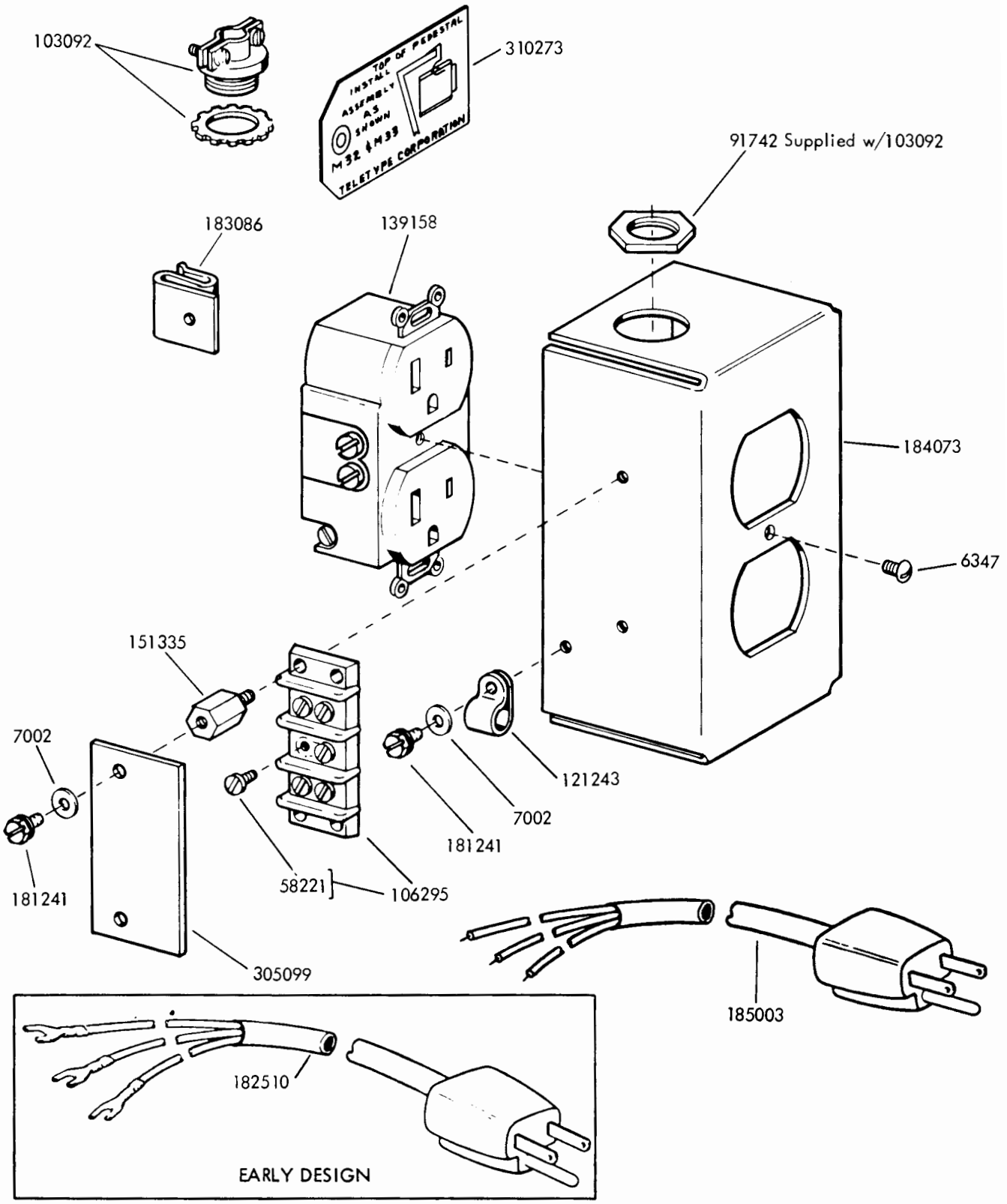

FIGURE 11. 184074 OUTLET BOX ASSEMBLY

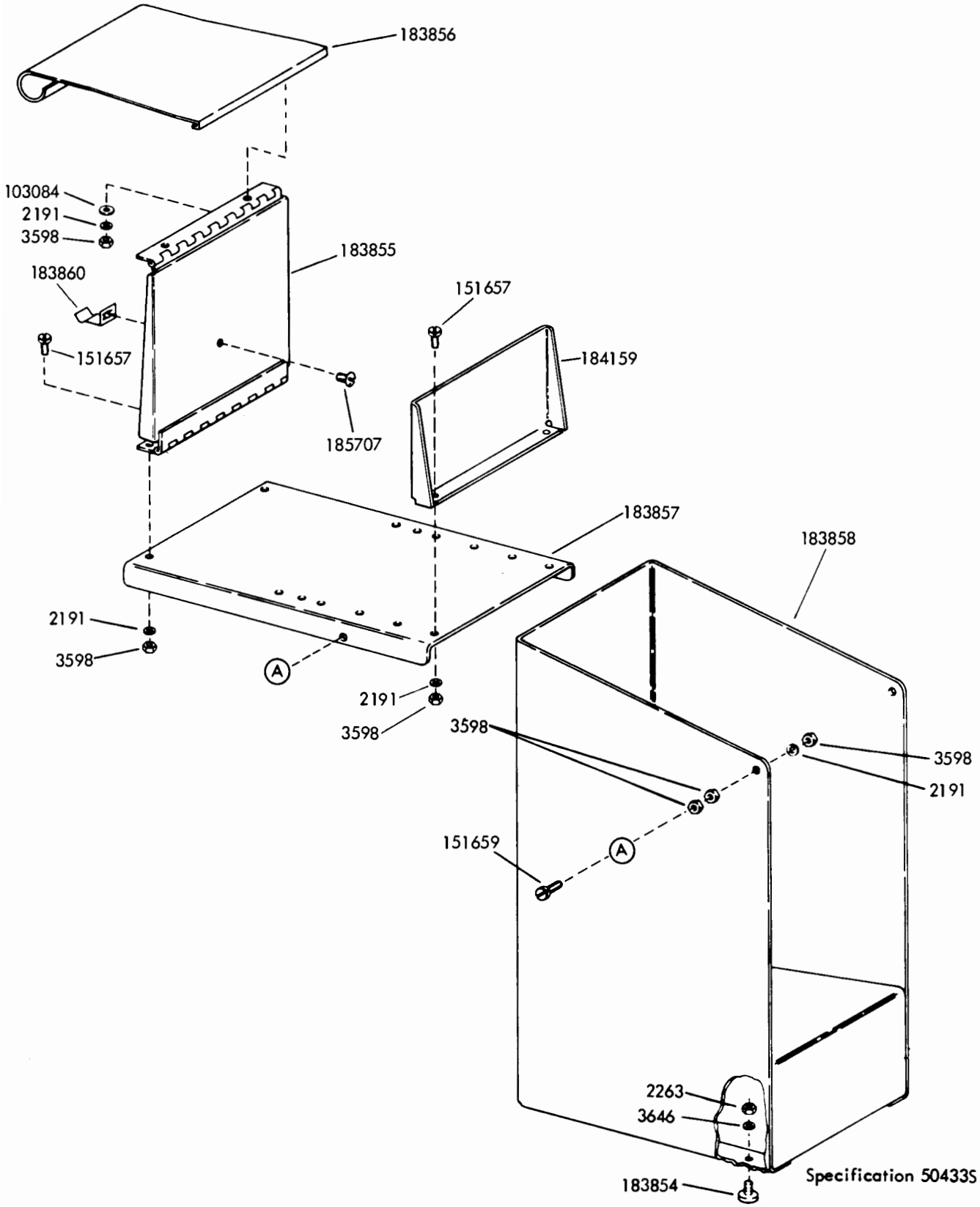

FIGURE 12. 183859 MODIFICATION KIT TO PROVIDE PAPER SUPPLY AND ACCUMULATING SHELF

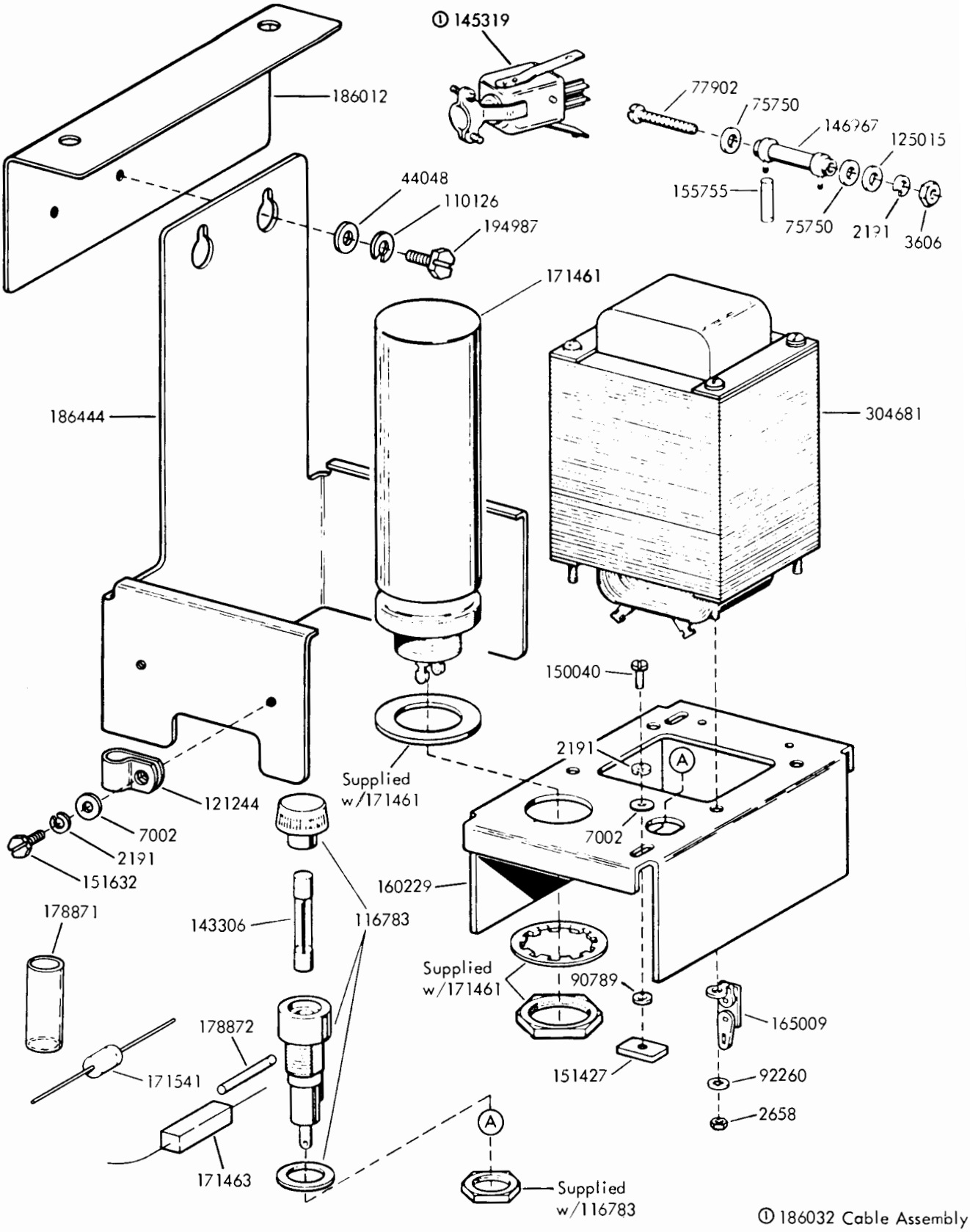

FIGURE 13. 186031 RECTIFIER ASSEMBLY

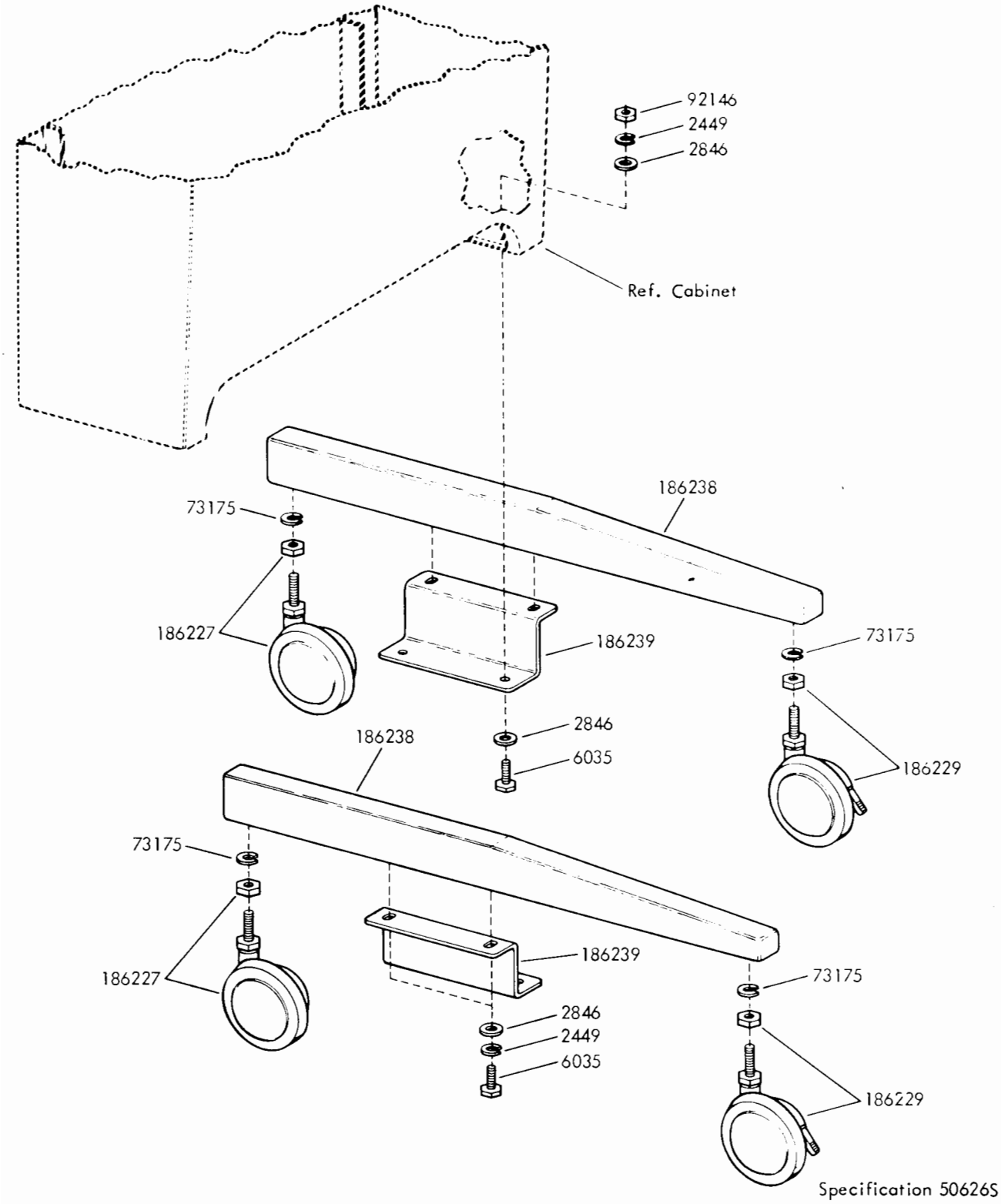

FIGURE 14. 186226 MODIFICATION KIT TO PROVIDE MOBILITY FOR CABINET

NUMERICAL INDEX

Part Number	Description and Page Number
2191	Lockwasher 7,8,9,10,13,14
2263	Nut, 8-32 Hex 13
2449	Lockwasher 8,15
2658	Nut, 6-32 Hex 14
2669	Lockwasher 11
2846	Washer, Flat 15
3598	Nut, 6-40 Hex 3,4,7,9,13
3606	Nut, 6-40 Hex 14
3640	Lockwasher 9,10
3646	Lockwasher 8,13
6035	Screw, 1/4-20 x 5/8 Hex 15
6345	Nut, 6-32 Hex 8
6347	Screw, 6-32 x 3/8 Rd 12
7002	Washer, Flat 4,7,12,14
44048	Washer, Flat 8,14
55323	Screw, 8-32 x 1/2 Rd 8
58221	Screw, 6-32 x 1/4 Fil 12
70314	Washer, Flat 7
73175	Lockwasher 15
74709	Spring 9
75750	Washer, Insulating 14
77902	Screw, 6-40 x 2-3/8 Rd 14
90789	Washer, Flat 14
91742	Nut, Lock 12
92146	Nut, 1/4-20 Hex 8,15
92260	Lockwasher 14
103084	Washer, Flat 13
103092	Connector, Cord 12
106295	Block, Terminal 12
107116	Lockwasher 7
110126	Lockwasher 14
115594	Nut, Speed 8,11
116783	Holder, Fuse 14
116793	Lockwasher 9
119634**	Button, Plug 5,8
119649	Ring, Retaining 4
121243	Clamp, 3/16" ID Cable 12
121244	Clamp, 1/4 ID Cable 14
121245	Clamp, 5/16" ID Cable 8
124177	Lockwasher 3,4
125015	Washer, Flat 3,4,10,14
125928	Washer, Flat 8,11
128913	Screw, 8-32 Self-Tapping 9
129098	Screw, 6-40 x 11/32 Flat 7
139158	Connector, Duplex Receptacle 12
143306	Fuse, SL-BL 1 Amp 14
145319	Receptacle, 4 Pt Plug 14
146967	Resistor, 750 Ohm 14
147811	Spacer, .250" Thk 7
147812	Frame, Tape Bin 7
147813	Window, Left Side 7
147814	Window, Right Side 7
147815	Divider, Tape Bin 7
147816	Plate, Retaining 7
147817	Guide, Tape Bin 7
150040	Screw, 6-40 5/8 Fil 14
151335	Stud 12
151413	Washer, Flat 8
151427	Plate, Clamp 14
151572	Lockwasher 7
151630	Screw, 6-40 x 1/4 Hex 9
151632	Screw, 6-40 x 3/8 Hex 14
151657	Screw, 6-40 x 1/4 Fil 7,13
151659	Screw, 6-40 x 1/2 Fil 10,13
151685	Screw, 4-40 x 5/16 Fil 9,10
151723	Screw, 10-32 x 3/8 Hex 11
152426	Nut, 6-40 Self-Locking 10
153021	Spring, Torsion 9,10
153538	Screw, 6-40 x 7/16 Hex 4
153841	Screw, 6-40 x 9/16 Hex 9,10
155087	Screw, 1/4-20 x 7/16 Rd 8
155755	Sleeve, 11/64 ID x 5/8" Lg Insulating 14
156632	Screw, 6-40 x 13/32 Hex 7
156887	Screw, 10-32 x 9/16 Hex 4
160229	Plate, Mounting 14
165009	Terminal 14
165255	Screw, No. 8 Spl 8
171461	Capacitor, 900 MFD 14
171463	Resistor, 1 Ohm 14
171541	Diode 14
178871	Sleeve, 1/2 ID x 1-1/8" Lg Insulating 14
178872	Sleeve, 1/16 ID x 1-1/4" Lg Insulating 14
180714	Screw, No. 6 Self-Tapping 7
180778	Plate 9,10
181043	Spindle, Paper Roll 9
181103	Cover, Base 11
181104	Clip, Cable 8
181108	Clip, Cable 11
181109	Mount, Vibration 11
181131	Window, Lid 9
181132	Lid w/Window 9
181133	Cover 2
181135	Nameplate 2
181137	Nameplate 2
181138	Pad 11
181139	Label, Designation (Bell) 2
181140	Label, Designation (W.U.) 2
181141	Screw, 8-32 Spl 2
181148	Nameplate 2
181237	Screw, 1/4-14 Self-Tapping 11
181241	Screw w/Lockwasher, 6-40 x 1/4 Hex 12
181244	Screw w/Lockwasher, 6-40 x 7/16 Hex 3,4
181245	Screw w/Lockwasher, 6-40 x 1/2 Hex 4
181287	Holder, Card 5
181288	Label, White 5
181289	Window, Plastic 5
181292	Window, Plastic 5
181297	Cover, Insulating 2
181442	Spring, Torsion 9
181443	Plate, Clamp 9
181444	Rod, Sensing 9
181812	Nameplate 2
181900	Cover 2
181901**	Faceplate 5
181902**	Faceplate 5
181903**	Faceplate 5
181904**	Faceplate 5
181909**	Faceplate 5
181910**	Faceplate 5
181914**	Faceplate 5
181921**	Faceplate 5
181922**	Faceplate 5
181931	Faceplate 5
181951	Insert, Nylon 11
182036	Copyholder Assembly 9
182109	Lid Assembly 3
182250	Foot, Rubber 11

**Refer to page 1 for finish suffix

NUMERICAL INDEX (Continued)

Part Number	Description and Page Number
182278	Support 2
182285	Bumper, Rubber 8
182468	Lid 3
182510	Cord, Power 12
182531	Clip, Speed 11
182662	Receiver 8
182760	Screw, 6-32 Spl 5,9
182764	Nut, Speed 5,9
182912	Lid 3
182913	Base, Cover 3
182917	Spring, Special 3
182918	Spindle 3
182919	Button 3
182921	Cover, Right 3
182922	Cover, Left 3
182924	Box, Chad 8
182926	Cover Assembly 3
182927	Cover 2
182928	Cover 2
182932	Nut, Speed 3
182935	Hub 3
182965	Box, Chad 8
183025	Bracket 4
183045	Cover 4
183046	Cover 4
183047	Base 4
183067	Shield 4
183068	Spring, Shield 4
183070	Grommet, Rubber 4
183086	Clip 12
183091	Post 4
183092	Cup 4
183094	Plate w/Studs 4
183112	Screw, 4-40 x 9/64 Fil 4
183117	Screw, 10-32 x 5/8 Hex 4
183118	Plate, Clamp 4
183125	Label 2
183133	Bracket 4
183134	Base 4
183135	Cover 4
183138	Modification Kit 4
183140	Cover 4
183141	Holder, Card 5,6
183243	Foot w/Bumper 8
183244	Panel 8
183245	Cabinet, Lower 7,8
183249	Screw, 5/16-18 Spl 8
183251	Rack 8
183252	Post 9,10
183253	Copyholder 9
183254	Guide, Line 9,10
183255	Shaft 9,10
183256	Bushing 9,10
183258	Handle, Copyholder 9,10
183260	Nut, Speed 7
183262	Retainer, Nut 8
183263	Cap, Light Gray 8
183500	Table Assembly 7,8
183501	Cover, Stand 7
183508**	Faceplate 5
183513	Cover 2
183854	Foot 13
183855	Plate w/Hinges 13
183856	Guide, Paper 13
183857	Shelf, Paper 13
183858	Bin, Paper Supply 13
183859	Modification Kit 1,13
183860	Clip, Spring 13
183966	Deflector, Paper 9
183976	Copyholder Assembly 1,10
183977	Washer, Spring 10
183978	Bracket, Left 10
183979	Copyholder 10
183980	Link 10
183981	Bracket, Right 10
184006	Screw, 8-32 Self-Tapping 4
184035	Label, Designation 2
184073	Bracket, Outlet 12
184074	Box Assembly, Outlet 1,12
184085	Screw, 8-32 Thumb 2,11
184159	Bracket, Back Stop 13
184206	Lid Assembly 3
184208	Spring 3
185003	Cord, Power 12
185605	Screw, 1/4-14 Self-Tapping 8
185698	Cable, Designation 2
185700	Base 4,11
185707	Screw, 10-24 x 5/16 Rd 13
185745**	Faceplate 6
185748**	Faceplate 6
185815	Nameplate 2
185871	Screw, w/Lockwasher 8-32 x 3/8 Hex 11
186012	Bracket 14
186016**	Faceplate 6
186031	Rectifier Assembly 1,14
186032	Cable Assembly 14
186037**	Faceplate 6
186039**	Faceplate 6
186040	Screw,8 x 1/2 Spl 8
186041	Cover 11
186054	Nameplate 2
186055	Nameplate 2
186056	Nameplate 2
186057	Nameplate 2
186179	Bracket 8
186180	Bumper, Rubber 8
186202	Shield 2
186203	Set of Parts 8
186208	Cover 2
186226	Modification Kit 1,15
186227	Caster 15
186229	Caster w/Brake 15
186238	Foot 15
186239	Bracket 15
186311	Bracket 9
186312	Set of Parts 9
186441**	Faceplate 6
186444	Bracket 14
186464**	Faceplate 6
186540	Screw, 1/4-20 x 1/4 Spl 8
186592	Clip 8
186593	Clip 8
186598**	Faceplate 5
186599**	Faceplate 5
186605	Deflector, Paper 9
186691	Insert 11
186713	Plate, Identification 2
186714	Plate, Identification 2
186715	Plate, Identification 2
186733	Insulator 11
186738	Insulator 11
186742	Label 8
186749	Bolt w/Cap 8
186777	Nut, 1/4-20 Self-Locking 8
186779**	Faceplate 6
186780**	Faceplate 6
187238	Cover 2
187239	Modification Kit 9
187240	Extension, Copyholder 9
187241	Shaft 9
187242	Clip 9
187246	Screw, 8-18 x 1/2 Hex 3
187247	Screw, 8-18 x 2-1/2 Hex 3

**Refer to page 1 for finish suffix

NUMERICAL INDEX (Continued)

Part Number	Description and Page Number	Part Number	Description and Page Number	Part Number	Description and Page Number
187258	Label 2	194987	Screw, 8-32 x 3/8 Hex 14	315755	Label 9
187259	Lable 2	195180	Bumper, Rubber 8	323129**	Faceplate 5
187272	Screw, 8-32 Thumb 2	195253	Rack Assembly, Display 8	328738**	Faceplate 5
187300	Cover 2	195256	Hanger 8	333189**	Faceplate 6
188824	Plug, Button 8	195259**	Modification Kit 8	340021	Plate, Identification 2
188875	Nut, Speed 8	197028	Terminal 7	340699	Clip, Cable 11
192263	Holder, Handset 8	199931	Bin Assembly, Tape	341364**	Faceplate 6
192289	Screw, 1/4-14 Self-		Storage 7	343690	Shelf 8
	Tapping 7,8	304681	Transformer 14	343691**	Modification Kit 8
193957	Spring, Roller 8	305099	Cover, Insulating 12	344285**	Faceplate 6
194822	Holder, Directory 8	310273	Tag, Instruction 12		

**Refer to page 1 for finish suffix