MODEL 630/630 ECS
PRINTERS/TERMINALS

API INTERFACE

P R E L I M I N A R Y

90440-00 Rev A December 1982

DIABLO SYSTEMS, INC.

A XEROX Company

FCC NOTICE

WARNING: This equipment generates, uses and can radiate radio frequency energy and, if not installed in accordance with the instructions manual, may cause interference to radio communications.

This equipment has been type tested and found to comply with the limits for a Class B computing device in accordance with the specifications in subpart J of Part 15 of the FCC Rules, which are designed to provide reasonable protection against such interference in a residential installation. This equipment generates and uses radio frequency energy, and if not installed and used properly in strict accordance with the manufacturers instructions, may cause interference to radio and television reception. There is, however no guarantee that interference will not occur in a particular installation.

If equipment certified to meet Class B limits does cause interference to radio or television reception, which can be determined by turning the equipment off and on, the user is encouraged to try to correct the interference by one or more of the following measures: (a) Reorient the receiving antenna. (b) Relocate the equipment with respect to the receiver. (c) Move the equipment away from the receiver. (d) Plug the equipment into a different outlet so that the equipment and the receiver are on different branch circuits.

If necessary, the user should consult the dealer or an experienced radio/television technician for help. In addition, an FCC booklet, "How to Identify and Resolve Radio-TV Interference Problems", Stock No. 004-000-00345-4, is available from the U.S. Government Printing Office, Washington, D.C., 20402.

In equipment labeled Class B compliant a shielded and grounded I/O cable is necessary to achieve compliance with the FCC Rules regarding radio emissions from computers. Please consult your dealer or authorized Diablo sales representative for further details regarding such a cable.

****

Diablo® , HyType® and XEROX® are trademarks of XEROX CORPORATION.
HyFeed is a trademark of Diablo Systems, Incorporated.

©Copyright 1982 by Diablo Systems, Inc., Hayward, California, USA
Publication No. 90440-00 Rev A - First Edition.

Printed In The USA

PREFACE

This manual describes interfacing and operating considerations pertaining to the Model 630 API interface configurations. It is written presuming the reader has a working knowledge of the type of interfaces described herein. In general, the discussion in this manual is limited to only those features of the subject interfaces that are directly pertinent to the operation of the Diablo Model 630 API terminals.

This manual is one in a family of manuals covering the Model 630 printers and terminals. For a list of related publications, refer to the Model 630 Product Description Manual, Publication No. 90442-XX; to the Model 630 Communications Terminal Operator's Guide, Publication No. 90445-XX; or to the Model 630 API/ECS Communications Terminal Operator's Guide, Publication No. 90466-XX.

Comments on all Diablo publications or their use are invited. Address your comments to:

Manager, Product Support Publications
Diablo Systems, Incorporated
P.O. Box 5030
Fremont, California 94537

Diablo Systems, Inc., reserves the right to make changes and/or improvements to its products without incurring any obligation to incorporate such changes or improvements in units previously sold or shipped.

****

WARRANTY

Diablo Model 630 printers and terminals are warranted against defects in materials and workmanship for 90 days from the date of purchase by the end user. Any questions regarding the warranty should be directed to your Diablo Sales Representative. All requests for repair should be directed to the Diablo or Xerox Service Center in your area. This will assure you of the fastest possible service. For a list of Service Center locations and description of available service options, refer to the Service Information Guide, Diablo Publication No. 90070-XX.

****

UL/CSA

UL recognized and listed under File No. E51242.
CSA certified as a component and printer under CSA File LR2196.

(For a complete list of pertinent standards and regulations, refer to section 1.5 in the Model 630 Product Description Manual, Publication No. 90442-XX.)

REVISION CONTROL RECORD

MODEL 630 API INTERFACE MANUAL - PUBLICATION NO. 90440-00

NOTE: On revised pages of text, each area of new revision is marked by a heavy vertical bar in the margin.

PAGE	REV	PAGE	REV	PAGE	REV	PAGE	REV
Cover	A	2-9	A	3-20	A	3-46	A
ii	A	2-10	A	3-21	A	3-47	A
iii	A	2-11	A	3-22	A	3-48	A
iv	A	2-12	A	3-23	A	3-49	A
v	A	2-13	A	3-24	A	3-50	A
vi	A	2-14	A	3-25	A	3-51	A
vii	A			3-26	A	3-52	A
viii	A	3-1	A	3-27	A	3-53	A
ix	A	3-2	A	3-28	A	3-54	A
x	A	3-3	A	3-29	A	3-55	A
		3-4	A	3-30	A		
1-0	A	3-5	A	3-31	A	4-1	A
1-1	A	3-6	A	3-32	A	4-2	A
1-2	A	3-7	A	3-33	A	4-3	A
1-3	A	3-8	A	3-34	A	4-4	A
1-4	A	3-9	A	3-35	A	4-5	A
1-5	A	3-10	A	3-36	A	4-6	A
1-6	A	3-11	A	3-37	A	4-7	A
1-7	A	3-12	A	3-38	A	4-8	A
		3-13	A	3-39	A	4-9	A
2-1	A	3-14	A	3-40	A	4-10	A
2-2	A	3-15	A	3-41	A	4-11	A
2-3	A	3-16	A	3-42	A	4-12	A
2-4	A	3-17	A	3-43	A	4-13	A
2-5	A	3-18	A	3-44	A	4-14	A
2-6	A	3-19	A	3-45	A	4-15	A
2-7	A					4-16	A
2-8	A					4-17	A

TABLE OF CONTENTS

SECTION 1 - GENERAL DESCRIPTION

1.1 General Information 1-1
1.2 Signal Conventions 1-5
1.3 Serial RS-232-C 1-5
1.4 IEEE-488 1-5
1.5 Centronics 1-7

SECTION 2 - INTERFACE HARDWARE AND SIGNALS

2.1 General 2-1
2.2 The API Circuit Board 2-1
2.3 The Interface Connector 2-1
2.4 Selecting The Type Of Interface 2-2
2.5 RS-232-C Interface 2-4
2.5.1 Cable 2-4
2.5.2 Pin Assignments 2-4
2.5.3 RS-232-C Signal Definitions 2-5
2.5.4 RS-232-C Interface Level Converter Circuits 2-5
2.5.4.1 Input Level Converter 2-5
2.5.4.2 Output Level Converter 2-6
2.6 IEEE-488 Interface 2-6
2.6.1 Cable 2-6
2.6.2 Pin Assignments 2-6
2.6.3 IEEE-488 Signal Definitions 2-7
2.7 Centronics-Type Interface 2-8
2.7.1 Cables 2-8
2.7.2 Pin Assignments 2-8
2.7.3 Centronics Signal Definitions 2-13
2.8 Feeder Interface 2-13

SECTION 3 - OPERATING CONSIDERATIONS

3.1 General 3-1
3.2 API-1.5 Operator Control Panel 3-1
3.2.1 Slide Switches 3-2
3.2.2 Command Switches 3-3
3.2.3 Indicator Lights 3-4
3.2.4 Control Panel Jumpers 3-4
3.3 API-2 Operator Control Panel 3-5
3.3.1 General 3-5
3.3.2 The Mode Switches 3-5
3.3.3 The Operating Switches 3-8
3.3.4 The Front Panel Indicators 3-10
3.3.4.1 Audio Alarm 3-10
3.3.4.2 Indicator Lamps 3-10
3.4 Control Codes 3-11
3.5 Escape Code Sequences 3-12
3.6 Serial RS-232-C Communications Protocols 3-14
3.6.1 ETX/ACK Protocol 3-14
3.6.2 DC1/DC3 (XON/XOFF) Protocol 3-14
3.6.3 Printer Ready Protocol 3-14
3.7 IEEE-488 Interface Protocol 3-15
3.8 Centronics Interface Protocol 3-15

3.9 Printing Format 3-15
3.9.1 Definition Of Terms 3-15
3.9.2 Standard Formats 3-17
3.9.3 Proportional Space Printing 3-17
3.9.4 Optional Formats (Variable Indexing) 3-18
3.9.4.1 Variable HMI (Remote HMI Mode) 3-18
3.9.4.2 Variable VMI (Remote VMI Mode) 3-19
3.9.4.3 Lines Per Page 3-19
3.10 Forward/Backward Printing 3-19
3.10.1 Auto Backward Printing 3-19
3.10.2 Programmed Backward Printing 3-20
3.10.3 Inverted Horizontal Motion (API-2 only) 3-20
3.11 Print Suppression (API-2 only) 3-20
3.12 Control Of Margins 3-20
3.12.1 Horizontal Margins 3-20
3.12.2 Vertical Margins 3-21
3.13 Tabbing 3-21
3.13.1 Absolute Horizontal Tab 3-22
3.13.2 Absolute Vertical Tab 3-22
3.13.3 Normal Horizontal Tab (API-2 only) 3-22
3.13.4 Normal Vertical Tab (API-2 only) 3-23
3.14 Line Feed 3-23
3.15 Half-Line Feed 3-23
3.16 Form Feed 3-23
3.17 Carriage Return 3-23
3.18 Auto Carriage Return 3-23
3.19 Graphics 3-24
3.20 Two-Color Printing 3-24
3.21 Reset/Initialization 3-24
3.21.1 Limited Reset 3-24
3.21.2 Initialize 3-25
3.22 Print Wheel Table Down-Load 3-25
3.22.1 General 3-25
3.22.2 Down-Load Data Record Format 3-27
3.22.2.1 Record Start Character 3-28
3.22.2.2 Record Type Character 3-28
3.22.2.3 Byte Count 3-28
3.22.2.4 Load Address 3-28
3.22.2.5 Table Data 3-30
3.22.2.6 Checksum 3-31
3.22.3 Down-Load Procedure 3-31
3.22.4 Sample Down-Load Structure 3-32
3.23 Remote Diagnostics 3-33
3.23.1 ESC SUB I 3-33
3.23.2 ESC SUB R 3-33
3.23.3 ESC SUB SO 3-33
3.23.4 ESC SUB 1 3-34
3.23.5 ESC SUB 3 (API-2 only) 3-34
3.24 Word Processing Features 3-34
3.24.1 Proportional Space Printing 3-35
3.24.2 Offset Selection 3-35
3.24.3 Auto Underscore 3-35
3.24.4 Bold Overprint 3-36
3.24.5 Shadow Print 3-36
3.24.6 Carriage Settling Time Control 3-36
3.24.7 Half-Unit Backspace 3-36

3.24.8 Program Mode 3-36
3.24.8.1 Spoke Position Data (first character) 3-36
3.24.8.2 Hammer Energy/Ribbon Advance Data (2nd char). 3-37
3.24.9 Auto Center 3-38
3.24.10 Auto Justify 3-38
3.24.11 Cancel Word Processing Features 3-39
3.25 HyPlot Vector Plotting (API-2 only) 3-40
3.25.1 Scope 3-40
3.25.2 Definition Of Terms 3-40
3.25.3 Description Of HyPlot Vector Plotting 3-41
3.25.4 The HyPlot Commands 3-42
3.25.5 Basic HyPlot Procedure 3-44
3.25.6 Summary 3-46
3.26 Feeder Support (API-2 only) 3-52
3.27 Self-Test 3-53
3.28 Print Speed Measurement 3-54
3.29 Extended Character Set (ECS) (API-2 only) 3-54
3.29.1 8-Bit ASCII 3-55
3.29.2 7-Bit ASCII (SO-SI) 3-55

SECTION 4 - OPERATING REFERENCES
4.1 API Print Wheel Support 4-1
4.2 ASCII Coding System 4-2
4.3 Print Wheel ASCII Code Charts 4-3
4.4 The Diablo Print Wheel Data Books 4-11
4.5 Decimal Value Tables 4-12
4.6 Tables For Character Proportional Space Units & Print Wheel Program Mode 4-15

ILLUSTRATIONS

Figure		Page
1-1	Diablo Model 630 API Terminals	1-0
1-2	Model 630 API Terminal Block Diagram	1-3
1-3	API Circuit Board Block Diagram	1-4
1-4	IEEE-488 Interface Timing	1-6
1-5	Centronics Interface Timing	1-7
2-1	API Circuit Board Layout	2-1
2-2	Model 630 API Interface Connector	2-2
2-3	RS-232-C Interface Cable	2-4
2-4	IEEE-488 Interface Cable	2-6
2-5	IBM Centronics Interface Cable	2-9
2-6	TRS-80 Models I/III Centronics Interface Cable	2-10
2-7	Apple II/III Centronics Interface Cable	2-11
2-8	Centronics 703 Interface Cable	2-12
2-9	Feeder Interface Connector	2-14
3-1	Model 630 API-1.5 Control Panel	3-2
3-2	Model 630 API-2 Control Panel	3-5
3-3	Page Layout And Printing Format	3-16

3-4 Down-Load Variations 3-26
3-5 Down-Load Record Format 3-27
3-6 Down-Load Table Memory Map 3-29
3-7 Sample Down-Load Structure 3-32
3-8 Absolute/Relative Vector Plot Example 3-45
3-9 HyPlot Flowchart 3-51
3-10 Self-Test Printout - API-1.5 3-53
3-11 Self-Test Printout - API-2 3-54
4-1 ASCII Code Chart 4-2
4-2 96-Character Print Wheel - Plastic 4-4
4-3 88-Character Print Wheel - Metal 4-5
4-4 92-Character Print Wheel - Metal 4-6
4-5 96-Character Print Wheel - Metal (Diablo) 4-7
4-6 96-Character Print Wheel - Metal (Rank Xerox) 4-8
4-7 ECS Elite 12 Scientific Print Wheel 4-9
4-8 ECS Pica 10 Teletex Print Wheel 4-10

TABLES

No. Page

1-1 API-1.5/API-2 Operating Features 1-2
2-1 Interface Selection 2-2
2-2 I/O Pin Assignments 2-3
2-3 RS-232-C Interface Cable Pin Assignments 2-4
2-4 IEEE-488 Interface Cable Pin Assignments 2-7
2-5 IBM Centronics Interface Cable Pin Assignments 2-9
2-6 TRS-80 Models I/III Interface Cable Pin Assignments . . . 2-10
2-7 Apple II/III Centronics Interface Cable Pin Assignments . 2-11
2-8 Centronics 703 Interface Cable Pin Assignments 2-12
2-9 Feeder Interface Connector Pin Assignments 2-13
3-1 Slide Switch And Jumper Assignments
On The API-1.5 Control Panel 3-1
3-2 IEEE-488 Primary Listen Addresses 3-9
3-3 Standard Printing Formats 3-17
3-4 Feeder Identification 3-34
3-5 ASCII Characters For Values Of h And v 3-42
3-6 Conversion - X/Y Plot Increments Of
Move To Binary Equivalents 3-43
3-6A Conversion - X/Y Plot Increments Of
Move To Binary Equivalents 3-48
3-6B Conversion - X/Y Plot Increments Of
Move To Binary Equivalents 3-49
3-6C Conversion - X/Y Plot Increments Of
Move To Binary Equivalents 3-50
3-7 Conversion - X/Y Plot Binary
Equivalents To ASCII Byte Code 3-43
3-7A Binary To ASCII 3-48
3-7B Binary To ASCII 3-49
3-7C Binary To ASCII 3-50
3-8 ASCII/Binary Code Chart 3-43
4-1 Hexadecimal-Decimal Conversion 4-3
4-2 Decimal Values Of ASCII Characters 4-12

4-3 ASCII Values For ESC Sequences 4-13
4-4 ASCII Values For ESC Sequences 4-14
4-5 Character Proportional Space Units - Metal Print Wheels . 4-15
4-6 Character Proportional Space Units -
96-Character Plastic Print Wheels 4-16
4-7 Print Wheel Program Mode -
Characters For Hammer Energy And Ribbon Advance . . 4-17

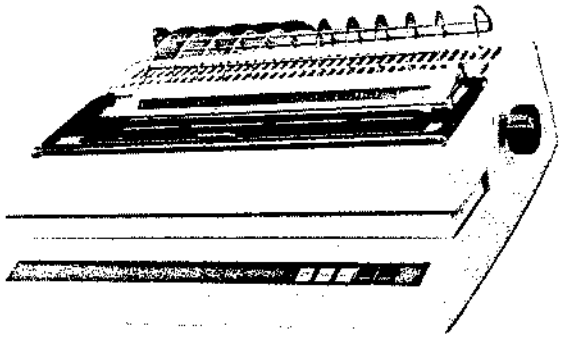

API - 1.5

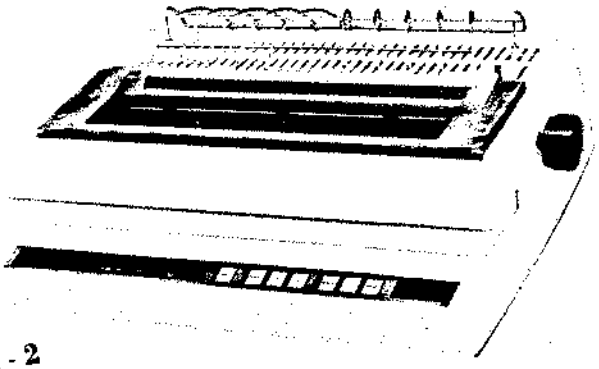

API - 2

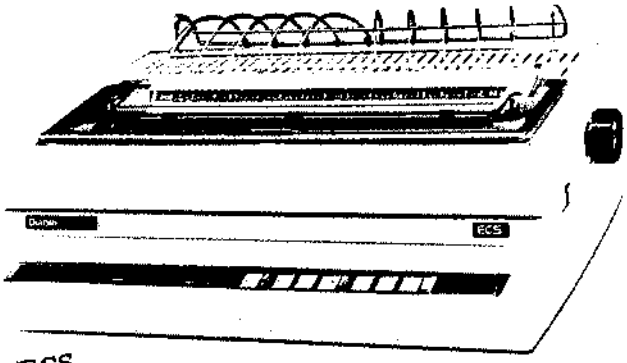

API/ECS

Figure 1-1. DIABLO MODEL 630 API TERMINALS

SECTION 1

GENERAL DESCRIPTION

1.1 GENERAL INFORMATION

This Interface Manual applies to both the standard Model 630 API and the Model 630 API/ECS. The standard Model 630 API operates with all Diablo and Xerox 88-, 92-, and 96-character metalized print wheels, and 96-character plastic print wheels. The ECS Model 630 also can use all of these print wheels, plus it can operate with Diablo's ECS (Extended Character Set) print wheels. The ECS print wheels can contain two characters per petal, or up to 192 characters per wheel.

At present, there are three Models of the 630 API: The API-1.5, API-2 and API/ECS. The API/ECS is simply a variation of the API-2 with an ECS carriage to accomodate ECS print wheels. All features attributed to API-2 in this manual apply equally to API/ECS, except for optional two-color ribbon capability which is not available in the ECS.

The term Model 630 as used in this manual encompasses both the ECS and non-ECS versions of the Model 630 API. In most respects, the Model 630 and Model 630 ECS function the same. The differences that exist relate to print wheel addressing, ribbon lift, and the mechanics of print wheel shifting required to access the inner and outer character rows on the ECS print wheels. These differences are noted wherever appropriate throughout this manual.

The Diablo Model 630 API terminals contain two major circuit boards - the SCE (Servo Control Electronics) board, and the API (ASCII Printer Interface) board. There are two generic versions of the API board, API-1.5 and API-2, each of which can function as a serial Receive-Only (RO) RS-232-C type interface, a listen-only IEEE-488 type parallel interface, or a Centronics type 8-bit parallel interface. The interface type is selected by the wiring configuration of the Diablo-supplied external interface cable connected to the 50-pin interface connector at the rear of the Model 630. There are no on-board jumpers or switches to set when selecting the type of interface.

The only difference in operation of the API board for the three different types of interface is the way in which data is accepted from the interface. Once loaded into the print buffer, all data is acted on by a common control program.

Table 1-1 gives a comparison of operating features supported by the API-1.5 and API-2 circuit boards. Figure 1-2 shows a block diagram of the Model 630 API terminal, and Figure 1-3 contains a block diagram of the API circuit board.

Table 1-1
API-1.5/API-2 OPERATING FEATURES

	API-1.5		API-2
Interface Types Supported:			
RS-232-C Serial.	S	Note	S
IEEE-488 Parallel.	S	3	S
Centronics Parallel.	S		S
Print Buffer Capacity:			
1536 Characters	S		
1344 Characters			S
Baud Rate Capability:			
300, 1200	S		
110, 300, 1200, 2400 . . .			S
Protocols:			
ETX/ACK, DC1/DC3, Printer Ready . .	S		S(4)
Parity Checking	S		S
Basic Control Panel	S		
Fully-Featured Control Panel			S
Metal/Plastic Print Wheel Select . . .	S		S
Foreign Language and APL Capability . .	(1)		S(1)
Extended Character Set (ECS) Capability			S
Character Spacing 10, 12, 15, PS . . .	S		S
Sheet Feed Accessory Support			S
Forms Tractor	O		O
Two-Color Ribbon Capability	O		(2)
Self Test	S		S
Remote Diagnostics	S		S
Print Table Down Load Capability . . .	S		S
HyPlot Vector Plotting			S
Auto Carriage Return	S		S
Auto Line Feed	S		S
Auto Backward Printing	S		S
Programmed Backward Printing	S		S
Inverted Horizontal Motion			S
Print Suppression			S
Margin Control	S		S
Absolute Tabbing	S		S
Normal Tabbing			S
Line Feed	S		S
Half-Line Feed	S		S
Form Feed	S		S
Graphics	S		S
Carriage Settling Time Control	S		S
Program Mode	S		S(5)
Offset Selection	S		S
Auto Underscore	S		S
Bold Overprint	S		S
Shadow Print	S		S
Half-Unit Backspace	S		S
Auto Center	S		S
Auto Justify	S		S
Cover Open Detect	S		S
End-of-Ribbon Detect	S		S
Paper Out Detect	S		S
VDE Compliance	S		S
FCC B Compliance	S		S

S = Standard
O = Optional

Notes:
1) Can be user defined thru print table down-load procedure.
2) Not available on Model 630 ECS; optional on standard Model 630.
3) Defined by interface cable configuration.
4) ETX/ACK cannot be used in ECS 7-bit ASCII mode.
5) Program Mode cannot be used with ECS 7-bit ASCII mode.

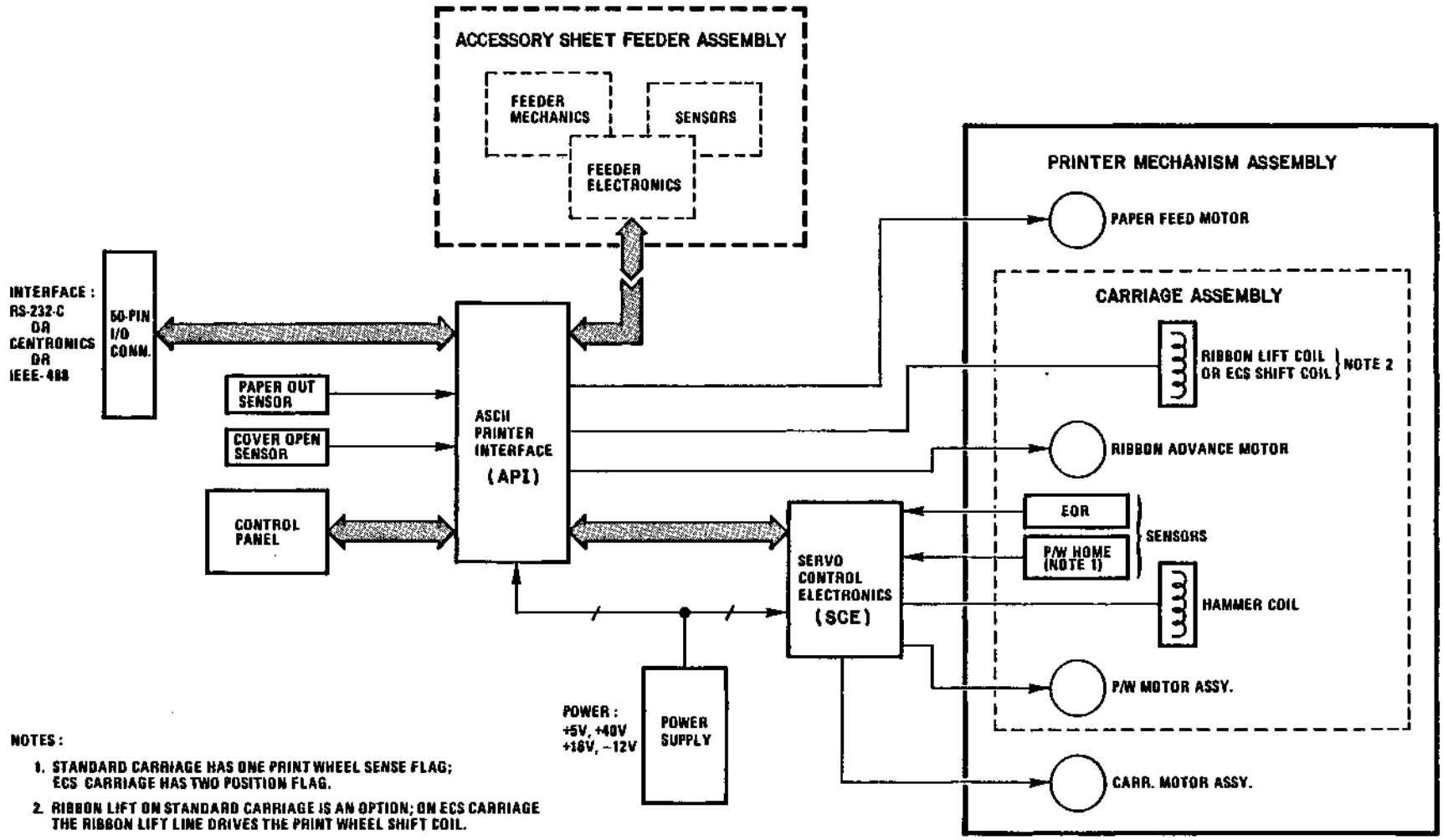

Figure 1-2. MODEL 630 API TERMINAL BLOCK DIAGRAM

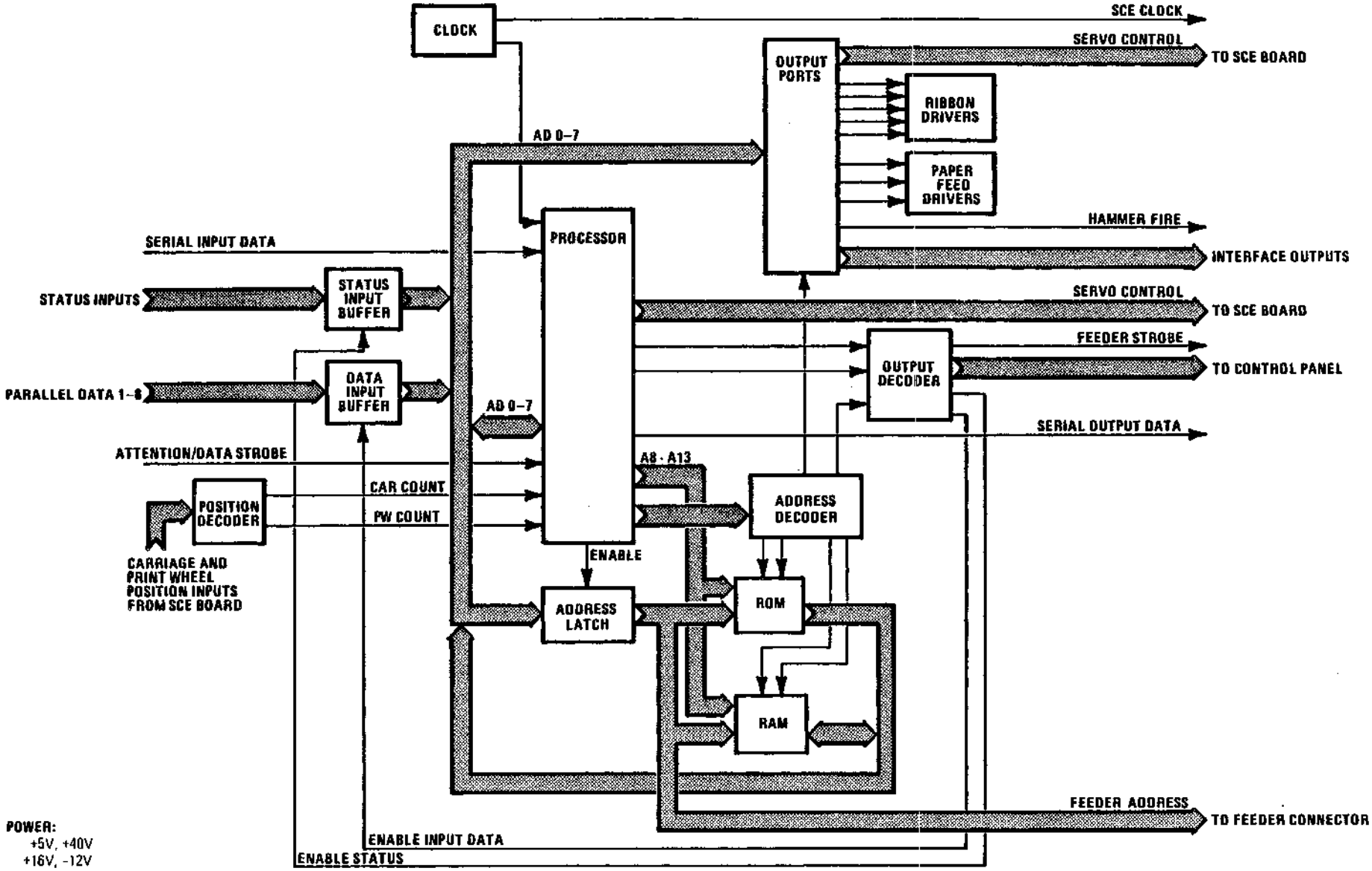

Figure 1-3. API CIRCUIT BOARD BLOCK DIAGRAM

1.2 SIGNAL CONVENTIONS

All signal designations used in this manual comply with the following conventions.

1) A signal name prefixed by a " - " symbol (as in -Rx DATA) identifies a signal whose active state is a low electrical level.

2) A signal name prefixed by a " + " symbol (as in +DTR) identifies a signal whose active state is a high electrical level.

3) Electrical levels are indicated by "H" (HI) or "L" (LO). HI indicates an electrical level greater than 2.4 volts. LO indicates an electrical level less than 0.8 volts.

4) The "true" state of a signal is indicated by a logical "1", and the "false" state by a logical "0", regardless of electrical levels. For example, -Rx DATA = 1 = LO and +DTR = 1 = HI.

1.3 SERIAL RS-232-C

Typically, the RS-232-C configuration of the Model 630 API receives data from a remote terminal or a host computer through a communications link comprised of telephone lines and a pair of modems. The API is capable of communicating over leased private lines and exchange dial networks, and through either frequency division multiplexed networks or time division multiplexed networks. Provision is made for connecting the terminal to a Bell 103A or equivalent modem. The API uses the USA Standard Code for Information Interchange (ASCII).

The API transmits and receives characters at switch selectable speeds of 300 and 1200 baud (API-1.5), or 110, 300, 1200 and 2400 baud (API-2). Each ASCII character code consists of a start bit, seven or eight data bits (selected through H5CPN control panel), a parity bit, and one stop bit.

The API serial interface configuration is directly compatible with the Diablo Model 630 SPI terminal interface.

1.4 IEEE-488

The IEEE-488 type interface is commonly referred to as the GPIB (General-Purpose Interface Bus). The addressing feature of this type of interface allows connecting several devices to the host computer on the same interface bus. The API IEEE-488 interface functions as an address-to-listen, listen-only device. The API is always a "listener", while the host computer is always the "talker".

The IEEE-488 interface consists of 24 parallel lines, 8 of which are used to send parallel data, 8 of which are grounds, 5 of which are bus management lines and 3 of which are handshake signals. These last three signals are called Not Ready For Data (NRFD), Data Valid (DAV), and Not Data Accepted (NDAC). These signals provide the required protocol for operation with this type of interface. Figure 1-4 shows the timing relationships between these signals.

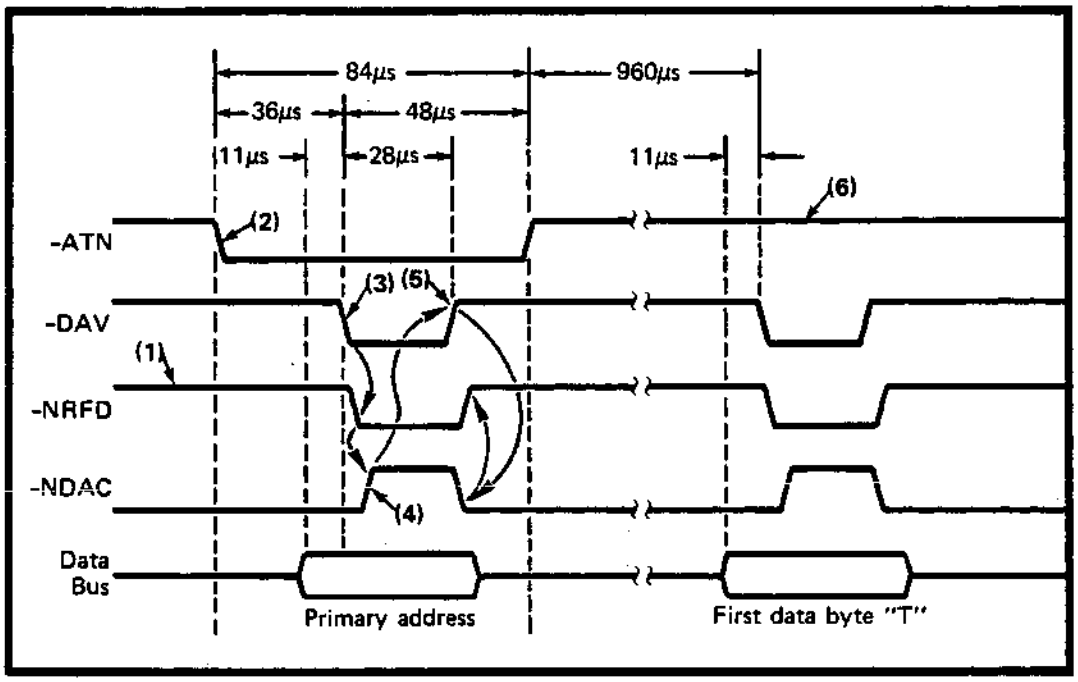

Figure 1-4. IEEE-488 INTERFACE TIMING

In operation, when the talker has data to send, it puts a LO on the -ATN line and waits until all listeners are ready. As each listener becomes ready, it releases the NRFD line. When all of the devices have released the line, the -NRFD signal is HI (point 1 in Fig. 1-4). This indicates to the talker that all of the devices are now ready to receive data. The talker drops the -ATN (attention) signal (2), puts the device address onto the data lines and sets -DAV (3), telling the listeners that data is ready to be sampled. The -ATN signal identifies the data on the data bus as a device address instead of regular data. The API compares the address on the data bus against the address switch settings on its control panel. If they match, the API enters the Listen state. The listener releases the NDAC line to indicate that it has read the data. When all listeners have released the NDAC line, the -NDAC signal goes HI (4) to tell the talker that all listeners have finished reading the data. The talker removes the data from the data bus and raises the -DAV signal (5) to indicate that the data bus no longer holds valid data. By repeating the address cycle, the talker can sequentially address multiple listeners to simultaneously receive the subsequent data string.

The addressed listener/s remains in the listen state, ready to receive data. Subsequent data cycles proceed in the same manner as the address cycle except that the -ATN signal is not present (6). The API terminates the listen state and enters the "Unlisten" state when -ATN goes LO, and a "UNL" code is received on the data bus.

Since the API does not have any capability to send information back to the controller, it does not support the SRQ, Serial Poll and Parallel Poll features of the standard IEEE-488 interface.

1.5 CENTRONICS

The Centronics type interface is 8-bit parallel with simple handshake signals. This type of interface does not support device addresses, and thus only one API can be connected to the interface. Figure 1-5 shows the timing relationship of the signals that serve as protocol or handshake signals in the API Centronics type interface.

The API supports four variations of the Centronics interface, each selected by the type of connector and the wiring configuration of its corresponding external interface cable. The four versions are:

IBM Personal Computer interface
TRS-80 Models I and III interface
Apple II and III interface
Type 703 Centronics interface

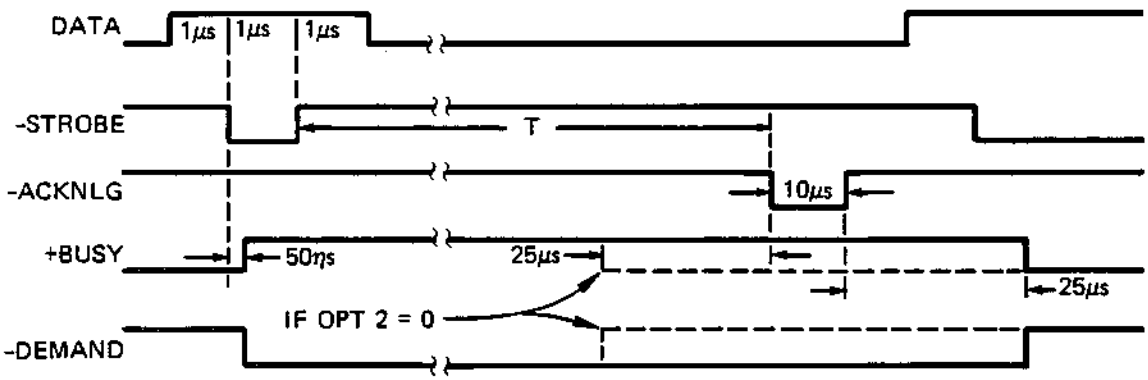

T = Depends on the program loop time.

Figure 1-5. CENTRONICS INTERFACE TIMING

The data transmission rate of the API Centronics type interface is 1000 characters per second nominal. The logic levels at the interface are TTL compatible.

SECTION 2

INTERFACE HARDWARE AND SIGNALS

2.1 GENERAL

The information in this section pertains to the signal interface only. Information regarding power supplies, grounding requirements, ventilation and physical space requirements is contained in Section 2 of the Model 630 Product Description manual, Publication No. 90442-XX.

The differences between the two standard configurations of the Model 630 API terminals (API-1.5 and API-2) appear only in the firmware installed on the API circuit board, and the control panel used with each. Thus the information in this section regarding interface hardware and signals applies equally to the API-1.5 and API-2 except where noted otherwise.

2.2 THE API CIRCUIT BOARD

The outline drawing in Figure 2-1 shows the locations of the processor, firmware and connectors on the API circuit board.

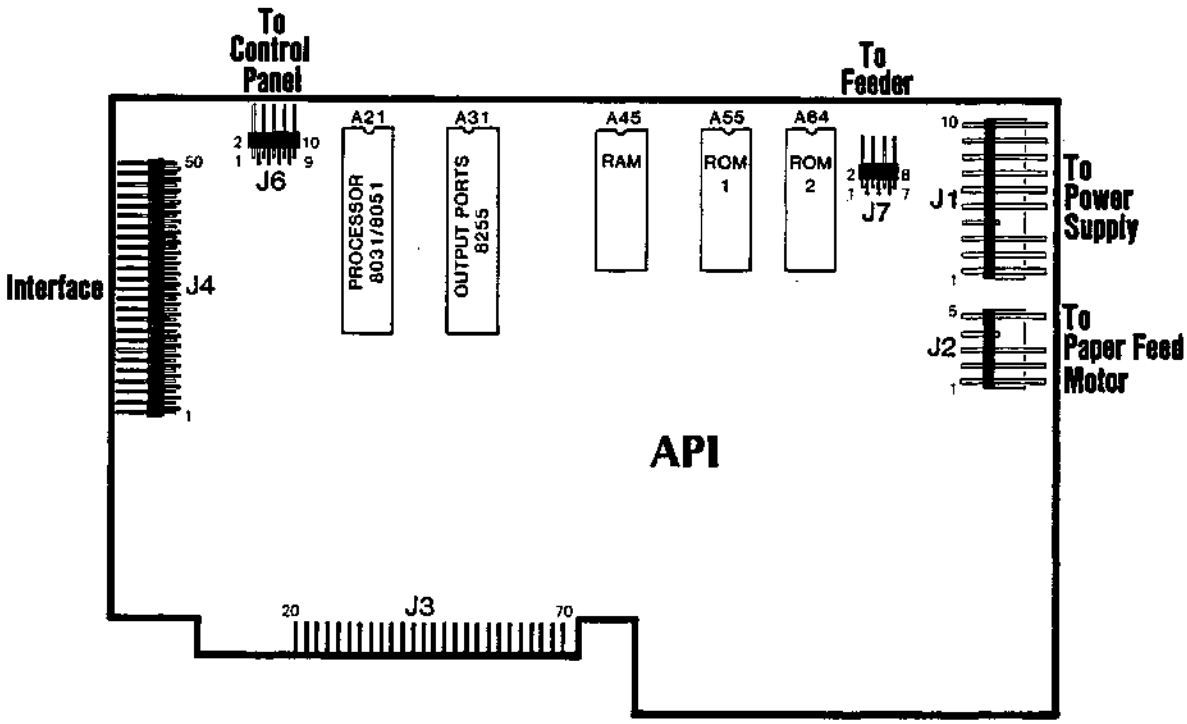

Figure 2-1. API CIRCUIT BOARD LAYOUT

2.3 THE INTERFACE CONNECTOR

The interface connector is a 50-position miniature ribbon cable connector mounted at the left-rear of the machine as shown in Figure 2-2. A 50-conductor internal interface cable connects from the interface connector to connector J4 on the API circuit

board. Table 2-2 gives the pin assignments for the interface signals, both at J4 on the API board and at the interface connector. The table lists the signals associated with all of the types of interface supported by the API.

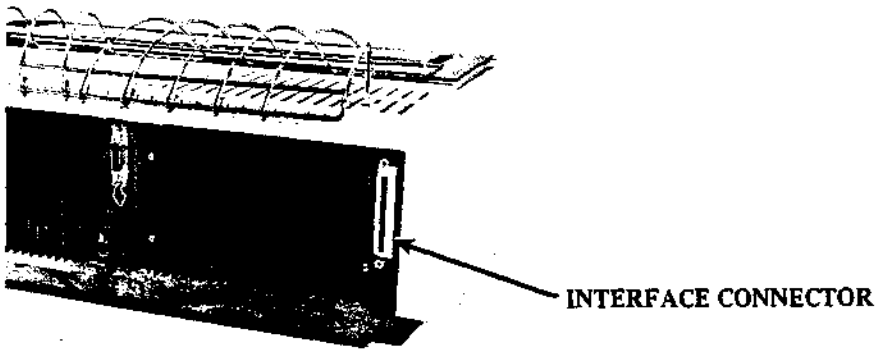

Figure 2-2. MODEL 630 API INTERFACE CONNECTOR

2.4 SELECTING THE TYPE OF INTERFACE

It is the HI-LO combination of the interface signals -REN, -OPTION 1, and -OPTION 2, which configures the API board to a particular type of interface. The four versions of the Centronics type interface are differentiated further by the wiring arrangement of the other interface lines and by the type of connector installed at the computer end of the external interface cable. The HI-LO combinations of -REN, -OPTION 1, and -OPTION 2 are defined in Table 2-1.

Table 2-1
INTERFACE SELECTION

-OPTION 1	-OPTION 2	-REN	INTERFACE
1	1	1	RS-232-C
1	1	0	IEEE-488
0	1	X	IBM-type Centronics
0	0	X	Centronics 737

1 = HI, 0 = LO, X = Don't Care

The means of controlling signals -OPTION 1, -OPTION 2, and -REN varies with the type of interface. For RS-232-C these signal lines are left open and the signals are held HI via pullup resistors on the API board.

For the IEEE-488 type interface, the -REN signal must be held LO by the host computer.

For the Apple II/III Centronics interface and TRS-80 Centronics interface the -OPTION 1 line is arranged in the interface cable such that it will be connected to an established ground in the host system.

For the IBM Centronics and Centronics 703 type interfaces, the -OPTION 1 signal is held LO by tying the -OPTION 1 line to a ground line within the P2 connector of the external interface cable. (Connector P2 is the one that connects to the 50-position interface connector mounted at the rear of the Model 630 - see Fig. 2-2.)

Table 2-2
I/O PIN ASSIGNMENTS

API J4	I/O Pin	IEEE-488	CENTRONICS	RS-232-C
1	1		+PE	
2	26		GND	
3	2		+5V	
4	27		GND	
5	3	N/C*		
6	28		GND	
7	4	N/C*		
8	29		GND	
9	5		+SELECT	
10	30		GND	
11	6		+BUSY	
12	31		GND	
13	7	-ATN	(Held HI)	
14	32		-OPTION 2	
15	8		-OPTION 1	
16	33	N/C* (Key)		
17	9	-DATA 1	+DATA 1	
18	34	-DATA 5	+DATA 5	
19	10	-DATA 2	+DATA 2	
20	35	-DATA 6	+DATA 6	
21	11	-DATA 3	+DATA 3	
22	36	-DATA 7	+DATA 7	
23	12	-DATA 4	+DATA 4	
24	37	-DATA 8	+DATA 8	
25	13	-EOI		
26	38	-REN		
27	14	-DAV	-DATA STROBE	
28	39	GND	GND	
29	15	-NRFD	-ACKNOWLEDGE	
30	40	GND	GND	
31	16	-NDAC	-DEMAND	
32	41	GND	GND	
33	17	-IFC	-INPUT PRIME	
34	42	GND	GND	
35	18	-SRQ	-FAULT	
36	43	GND	GND	
37	19	-ATN	-DATA STROBE	
38	44	GND	GND	
39	20	Shield		
40	45	Logic GND	GND	
41	21	N/C*		
42	46		GND	
43	22		Chassis GND	Chassis GND
44	47		Signal GND	Signal GND
45	23			RTS (+12V pullup)
46	48			-RX DATA
47	24			-TX DATA
48	49			+DSR
49	25			+DTR
50	50	N/C* (Key)		

* - N/C means that position is open on the API board.

2.5 RS-232-C INTERFACE

2.5.1 Cable

The external interface cable for the RS-232-C type interface is illustrated in Figure 2-3. As supplied by Diablo, this is a 10-foot, 25-conductor cable, double-shielded for VDE/FCC emission compliance. At both ends of the cable only the seven lines that will actually be used are wired into the connectors. This cable is available from Diablo as part number 320781-01.

For the RS-232-C interface configuration, the API board requires that the signals -OPTION 1, -OPTION 2, and -REN be HI; thus these lines are open at connector P2 on this cable, and the signals are held HI via pullup resistors on the API board.

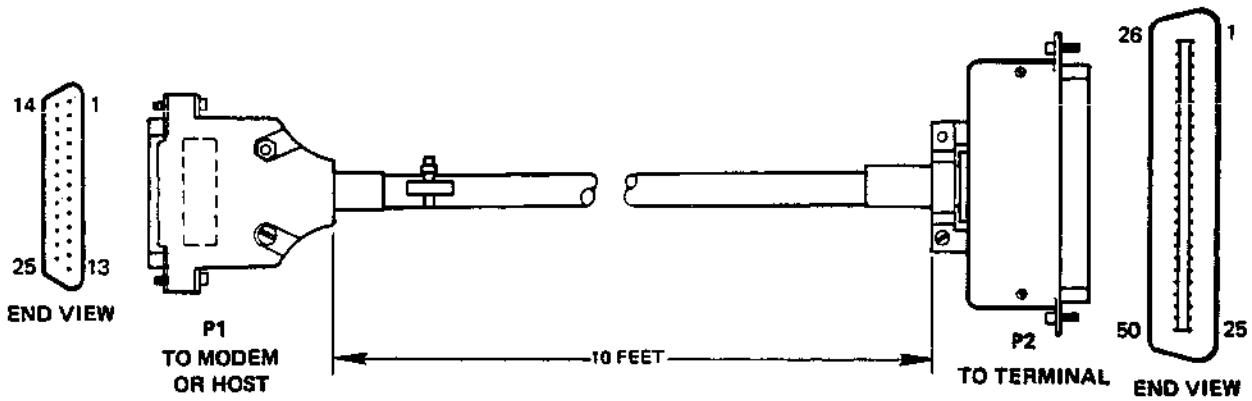

Figure 2-3. RS-232-C INTERFACE CABLE
DIABLO Part No. 320781-01

2.5.2 Pin Assignments

Table 2-3 lists the EIA RS-232-C interface cable pin assignments used by the Model 630 API terminal. The arrows in the table indicate the direction of signal flow at the interface.

Table 2-3
RS-232-C INTERFACE CABLE PIN ASSIGNMENTS

Signal Flow Modem	Signal Flow Terminal	P1 Pin	P2 Pin	CCITT	TelCo	Signal
———	———	1	22	101	AA	CHASSIS GND
←	———	2	24	103	BA	-TRANSMITTED DATA *
———	→	3	48	104	BB	-RECEIVED DATA *
←	———	4	23	105	CA	+REQUEST TO SEND (+12V pullup)
———	→	6	49	107	CC	+DATA SET READY *
———	———	7	47	102	AB	SIGNAL GND
←	———	20	25	108	CD	+DATA TERMINAL READY

NOTES:
* In installations where the Model 630 will be cabled directly to the host system rather than thru a modem, the user must ensure the following conditions:
  1. The +DATA SET READY input must be held HI during data input to the terminal.

Strap pin 23 to pin 49 to pull up DSR.

2. All status conditions required by the host system must be satisfied.
3. The transmitted data from the Model 630 must connect to the received data input of the host computer, and vice versa. In some cases, it may be necessary to alter the wiring at the P1 connector of the I/O cable to exchange the two wires connected to pins 2 and 3.

2.5.3 RS-232-C Signal Definitions

CHASSIS GND - Connects to chassis ground within the Model 630.

-TRANSMITTED DATA (-TxD) - This is the serial ASCII-coded digital data being transmitted by the Model 630. This signal is in the "mark" state (LO) between characters, rises for logic 0 and drops for logic 1.

-RECEIVED DATA (-RxD) - This is the serial ASCII-coded digital data being received by the Model 630. This signal must be held in the "mark" state (LO) between characters. It should go HI for logic 0, and LO for logic 1.

+REQUEST TO SEND (+RTS) - Held HI (+12V) on the API circuit board whenever power is on.

+DATA SET READY (+DSR) - Must be held HI, by either the modem or the host computer, during data input to the Model 630. If LO, no data can be received.

SIGNAL GND - Ground reference for all interface signals.

+DATA TERMINAL READY (+DTR) - Always HI if Printer Ready protocol is not selected. If Printer Ready protocol is selected at the control panel, the terminal causes this signal to go LO under any of the following conditions:

- Cover open
- Paper out, and printing is attempted
- End of ribbon, and printing is attempted
- Printer in check, and printing is attempted
- Print buffer becomes nearly full (within 64 characters)

This signal will go true (HI) when the print buffer becomes nearly empty and all the other conditions listed above are corrected.

2.5.4 RS-232-C Interface Level Converter Circuits

2.5.4.1 Input Level Converter

The API circuit board uses type 75154 quad line receiver integrated circuits to convert the +/-12V modem signals into +5V and 0V for use by the TTL logic in the Model 630. These circuits are capable of handling the +/-25V maximum voltage swings allowed under EIA Standard RS-232-C. Input resistance is from 3K to 7K ohms, with 5K typical.

2.5.4.2 Output Level Converter

Type 75150 line driver integrated circuits are used to convert the TTL levels used within the Model 630 into +/-12V suitable for use on the RS-232-C interface. These circuits can withstand sustained output short circuits to any low-impedance voltage within the RS-232-C range (+/-25V).

2.6 IEEE-488 INTERFACE

2.6.1 Cable

The external interface cable for the IEEE-488 type interface is illustrated in Figure 2-4. As supplied by Diablo, this is a 10-foot, 25-conductor cable, double shielded for VDE/FCC emission compliance. The computer end of this cable is equipped with a 24-position connector (P1) with cable wires connected at all 24 positions. The terminal end of this cable is equipped with the standard 50-position connector (P2) that mates with the interface connector at the rear of the terminal. This cable is available from Diablo as part number 320820-01. The maximum allowable interconnecting cable length is 4 meters.

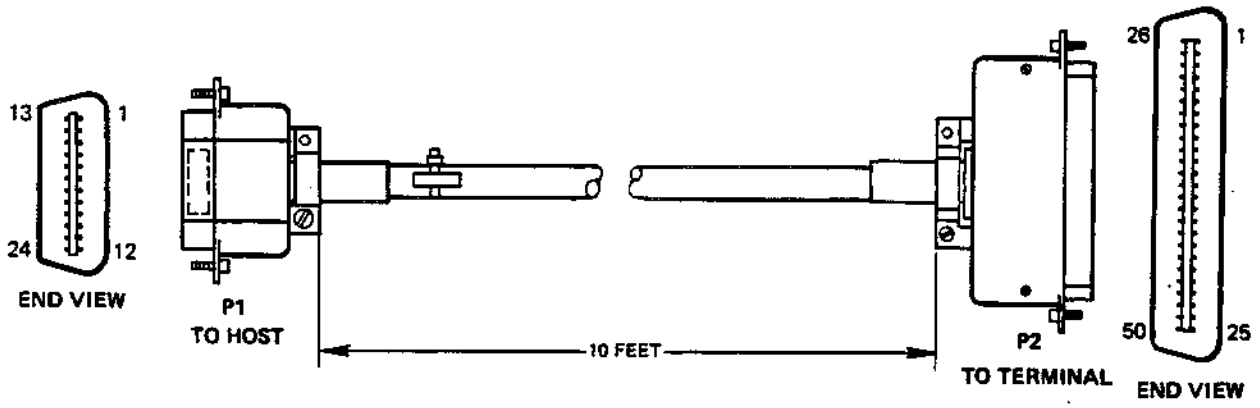

Figure 2-4. IEEE-488 INTERFACE CABLE
DIABLO Part No. 320820-01

2.6.2 Pin Assignments

Table 2-4 lists the IEEE-488 interface cable pin assignments used by the Model 630 API terminal. The arrows in the table indicate the direction of signal flow at the interface.

Table 2-4
IEEE-488 INTERFACE CABLE PIN ASSIGNMENTS

Signal Flow Computer	Terminal	P1 Pin	P2 Pin	Signal
→		1	9	-DATA 1
→		2	10	-DATA 2
→		3	11	-DATA 3
→		4	12	-DATA 4
→		5	13	-EOI
→		6	14	-DAV
←		7	15	-NRFD
←		8	16	-NDAC
→		9	17	-IFC
←		10	18	-SRQ (always HI in API)
→		11	19/7	-ATN
—		12	20	CHASSIS GND
→		13	34	-DATA 5
→		14	35	-DATA 6
→		15	36	-DATA 7
→		16	37	-DATA 8
→		17	38	-REN
—		18	39	GND
—		19	40	GND
—		20	41	GND
—		21	42	GND
—		22	43	GND
—		23	44	GND
—		24	45	LOGIC GND

NOTE: Where more than one pin number (X/Y) is listed under P2, the interface line connects to the first pin, and is then jumpered to the second pin at the connector.

2.6.3 IEEE-488 Signal Definitions

-DATA 1 - 8 - This is the parallel ASCII-coded data being received by the Model 630 API. The Data signals must be LO for a logic "1" and HI for a logic "0". A data byte received when the -ATN signal is LO represents device address, and data received when -ATN is HI represents print data and print commands.

-ATN (Attention) - This signal is issued by the controller to gain attention of the API and any other devices on the interface bus before beginning the handshake sequence. The controller must hold -ATN LO while it places the device address on the Data lines. While sending subsequent data bytes, -ATN must be HI. -ATN must again be LO when the controller sends the UNL (Unlisten) byte at the end of the data string.

-EOI (End Or Identify) - The API ignores this line. Typically this signal is issued by the talking device to notify the listening device/s that the data byte currently on the data lines is the last one. Or it is issued by the controller together with ATN to initiate

a parallel poll sequence. API does not support the parallel poll command, and it recognizes the end of a data string only by receiving the UNL (Unlisten) data byte with -ATN = LO.

-IFC (Interface Clear) - A LO signal initializes the API.

-REN (Remote Enable) - Typically, -REN is asserted by the controller to place all of the devices on the interface bus into their remote operating modes. In the API, this line is used to configure the printer to IEEE-488 (-REN = LO) or RS-232-C (-REN = HI). For IEEE-488, -REN must be held LO by the host computer.

-SRQ (Service Request) - Typically, -SRQ is issued by any device on the interface bus to gain attention of the controller. This line is always HI in the API, except when being used for print speed measurement (see subsection 3.28).

The following three signals operate in a 3-line handshake process to transfer each data byte across the interface.

-DAV (Data Valid) - When LO, this signal indicates that valid data is present on the Data I/O lines.

-NRFD (Not Ready For Data) - LO indicates that the API is not ready to accept data from the interface bus.

-NDAC (Not Data Accepted) - Indicates whether the API has accepted the data byte currently on the data I/O lines.

2.7 CENTRONICS-TYPE INTERFACE

2.7.1 Cables

The four variations of the Centronics interface offered by the Model 630 API are derived by the wiring and connector configurations of four different interface cables. These four cable configurations are illustrated in Figures 2-5 thru 2-8.

As supplied by Diablo, these cables are double-shielded for VDE/FCC emission compliance. Cable length is 10 feet except in the case of the Centronics 703 interface adaptor cable which is only 6 inches long. The IBM-Centronics interface cable contains 25 conductors; the others all contain 33 conductors.

2.7.2 Pin Assignments

Tables 2-5 thru 2-8 give the pin assignments of the four Diablo interface cables for the Centronics-type interfaces.

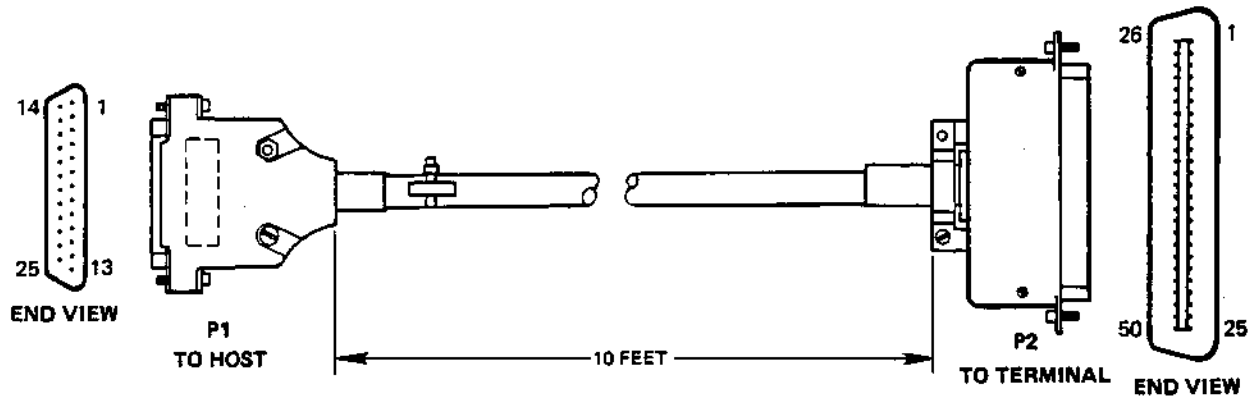

Figure 2-5. IBM CENTRONICS INTERFACE CABLE
DIABLO Part No. 320782-01

Table 2-5
IBM CENTRONICS INTERFACE CABLE PIN ASSIGNMENTS

Signal Flow Computer	Signal Flow Terminal	P1 Pin	P2 Pin	Signal
	→	1	14/19	-DATA STROBE
	→	2	9	+DATA 1
	→	3	10	+DATA 2
	→	4	11	+DATA 3
	→	5	12	+DATA 4
	→	6	34	+DATA 5
	→	7	35	+DATA 6
	→	8	36	+DATA 7
	→	9	37	+DATA 8
←		10	15	-ACKNOWLEDGE
←		11	6	+BUSY
←		12	1	+PE
←		13	5	+SELECT
		14		
←		15	18	-FAULT
	→	16	17	-INPUT PRIME
—	—	17	26	GND
—	—	18	41	GND
—	—	19	22	Chassis GND
	→	20	8/27	-OPTION 1 / GND
—	—	21	28	GND
—	—	22	29	GND
—	—	23	30	GND
—	—	24	39	GND
—	—	25	40	GND

NOTE: Where more than one pin number (X/Y) is listed under P2, the interface line connects to the first pin, and is then jumpered to the second pin at the connector.

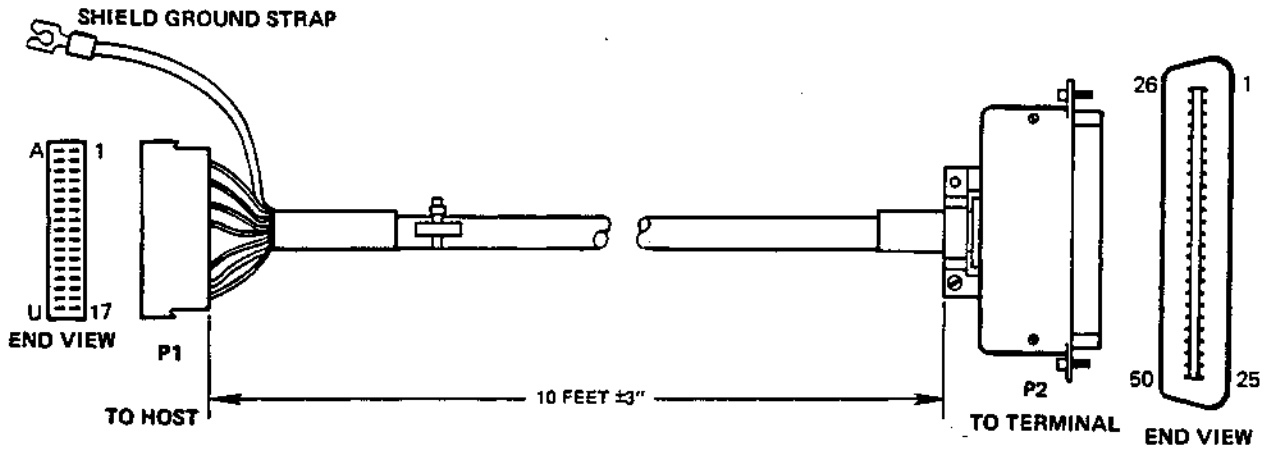

NOTE: Ground strap must be connected to chassis ground within the HOST system to achieve FCC-B compliance using the Interface cable.

Figure 2-6. TRS-80 MODELS I/III CENTRONICS INTERFACE CABLE
DIABLO Part No. 320837-01

Table 2-6
TRS-80 MODELS I/III INTERFACE CABLE PIN ASSIGNMENTS

Signal Flow Computer	Signal Flow Terminal	P1 Pin	P2 Pin	Signal
→		1	14/19	-DATA STROBE
→		2	9	+DATA 1
→		3	10	+DATA 2
→		4	11	+DATA 3
→		5	12	+DATA 4
→		6	34	+DATA 5
→		7	35	+DATA 6
→		8	36	+DATA 7
→		9	37	+DATA 8
←		11	6	+BUSY
←		12	1	+PE
←		13	5	+SELECT
—		14	46	GND
—		A	45	GND
—		B	27	GND
—		C	28	GND
—		D	29	GND
—		E	30	GND
—		F	31	GND
—		H	39	GND
—		J	40	GND
—		K	41	GND
→		L	8	-OPTION 1
—		M	26	GND
—		N	42	GND
←		R	18	-FAULT
—		U	43	GND

NOTE: Where more than one pin number (X/Y) is listed under P2, the interface line connects to the first pin, and is then jumpered to the second pin at the connector.

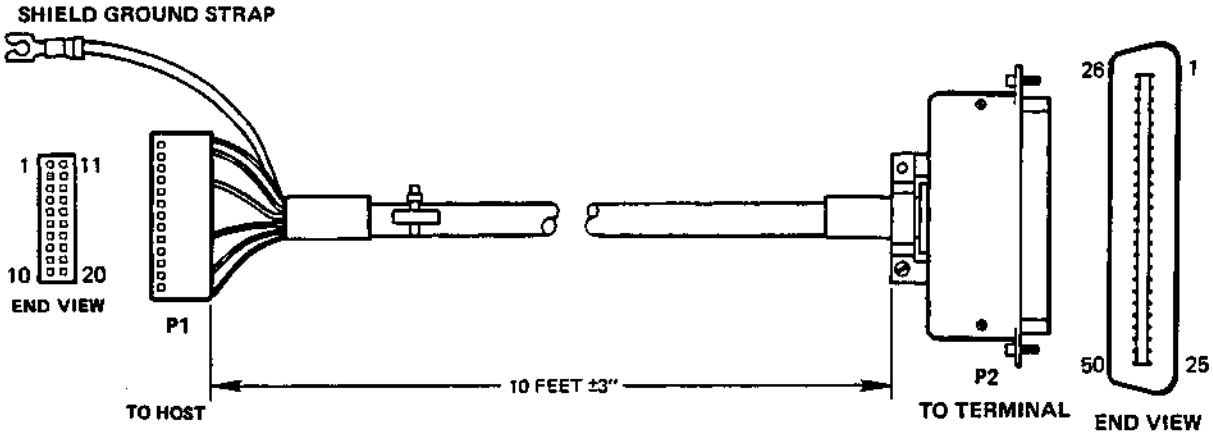

NOTE: 1. Ground strap must be connected to chassis ground within the HOST system to achieve FCC-B compliance using the Interface cable.

2. P1 pin 1 must connect to pin 19 of the Printer interface connector on the APPLE Parallel Printer Card.

Figure 2-7. APPLE II/III CENTRONICS INTERFACE CABLE
DIABLO Part No. 320838-01

Table 2-7
APPLE II/III CENTRONICS INTERFACE CABLE PIN ASSIGNMENTS

Signal Flow Computer	Signal Flow Terminal	P1 Pin	P2 Pin	Signal
→	→	2	37	+DATA 8
→	→	3	35	+DATA 6
→	→	4	12	+DATA 4
→	→	5	10	+DATA 2
←	←	6	1	+PE
→	→	10	8	-OPTION 1
—	—	11	42	GND
→	→	13	36	+DATA 7
→	→	14	34	+DATA 5
→	→	15	11	+DATA 3
→	→	16	9	+DATA 1
→	→	17	14/19	-DATA STROBE
←	←	20	15	-ACKNOWLEDGE

NOTE: Where more than one pin number (X/Y) is listed under P2, the interface line connects to the first pin, and is then jumpered to the second pin at the connector.

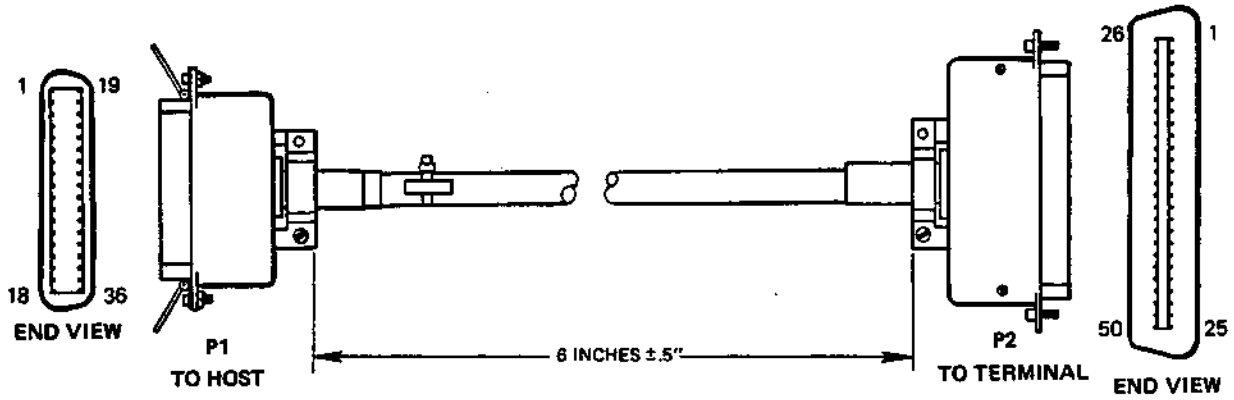

Figure 2-8. CENTRONICS 703 INTERFACE CABLE
DIABLO Part No. 320839-01

Table 2-8
CENTRONICS 703 INTERFACE CABLE PIN ASSIGNMENTS

Signal Flow Computer	Signal Flow Terminal	P1 Pin	P2 Pin	Signal
	→	1	14/19	-DATA STROBE
	→	2	9	+DATA 1
	→	3	10	+DATA 2
	→	4	11	+DATA 3
	→	5	12	+DATA 4
	→	6	34	+DATA 5
	→	7	35	+DATA 6
	→	8	36	+DATA 7
	→	9	37	+DATA 8
←		10	15	-ACKNOWLEDGE
←		11	6	+BUSY
←		12	1	+PE
←		13	5	+SELECT
—	—	14	42	GND
—	—	15	44	GND
—	—	16	43	GND
—	—	17	22	Chassis GND
—	—	18	2	+5V
—	—	19	45	GND
	→	20	27/8	GND / -OPTION 1
—	—	21	28	GND
—	—	22	29	GND
—	—	23	30	GND
—	—	24	31	GND
—	—	25	39	GND
—	—	26	40	GND
—	—	27	41	GND
—	—	28	46	GND
—	—	29	26	GND
—	—	30	47	Signal GND
	→	31	17	-INPUT PRIME
←		32	18	-FAULT
		36	21	N/C (This line left open on API circuit board)

Note: Where more than one pin number (X/Y) is listed under P2, the interface line connects to the first pin, and is then jumpered to the second pin at the connector.

2.7.3 Centronics Signal Definitions

-DATA STROBE * - At the LO level of this signal, the API reads the data on the data bus.

-ACKNOWLEDGE - LO indicates that the printer has received data and is ready to accept next data.

+BUSY - HI indicates that the printer can not receive data.

+PE - HI indicates that the printer is out of paper.

+SELECT - HI indicates that the printer is on line.

-DEMAND - The inverse of the BUSY signal.

-INPUT PRIME * - A LO pulse will initialize the printer.

-FAULT - LO indicates that the printer is in error mode.

* Signals generated by the host.

2.8 FEEDER INTERFACE

The API-2 offers a feeder interface to operate a Diablo accessory sheet feeder. Cables within the Model 630 bring feeder control signals and power from the API circuit board (connector J7) and the power supply to an external feeder connector mounted at the center rear of the printer, as shown in Figure 2-9.

Figure 2-9 also shows an outline drawing of the feeder interface connector and its pin arrangement. Table 2-9 lists the pin assignments for the feeder interface signals at the feeder interface connector.

Table 2-9
FEEDER INTERFACE CONNECTOR PIN ASSIGNMENTS

Pin	Description	Pin	Description
1	Chassis Ground	9	-FEED STATUS
2	-A0 (command signal)	10	-POWER DOWN
3	-A1 (command signal)	11	-FEED STROBE
4	-A2 (command signal)	12	N.C.
5	N.C.	13	N.C.
6	N.C.	14	+40V Signal Ground
7	+5V	15	+40V
8	+5V Signal Ground		

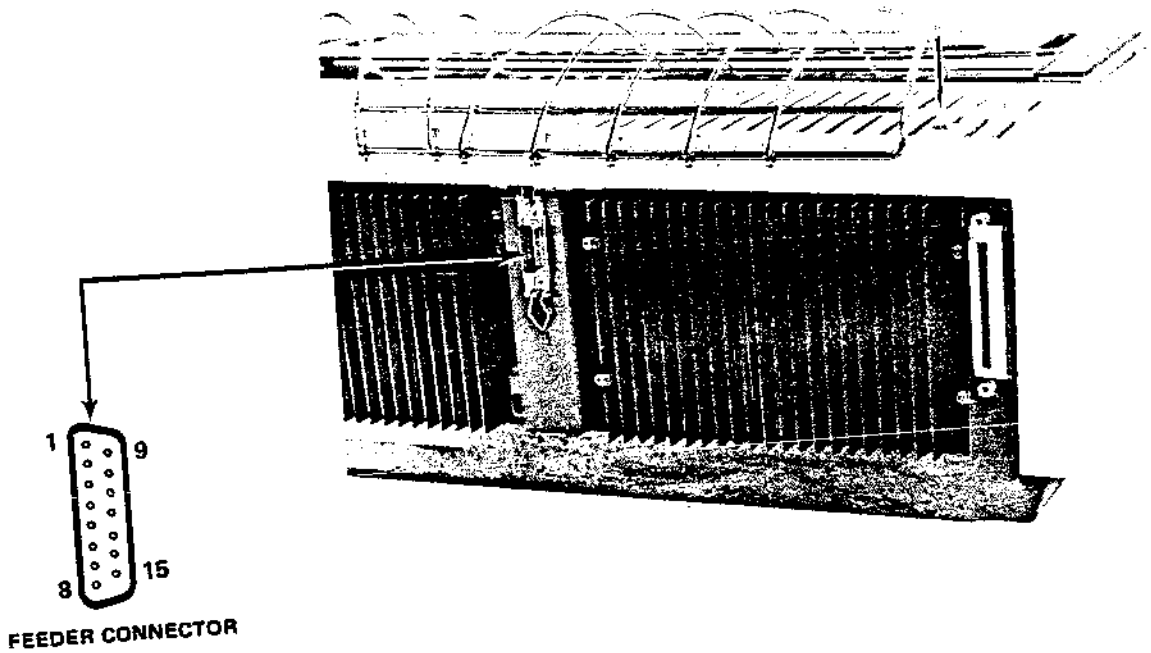

Figure 2-9. FEEDER INTERFACE CONNECTOR

SECTION 3

OPERATING CONSIDERATIONS

3.1 GENERAL

This section of the manual contains a detailed discussion of the operating features of the Model 630 HPRO5 terminals. The procedures for routine operator duties, such as changing ribbons and print wheels, are given in detail in the Model 630 Operator's Guide, and thus are not repeated here.

Generally, the API-1.5 and API-2 possess most of the same operating features. Where differences do exist, this is noted in the text.

3.2 API-1.5 OPERATOR CONTROL PANEL

The operator control panel used on the Model 630 API-1.5 is the same as that used on the Model 630 SPI terminal, although initially the switch label will be different in order to identify the additional switch functions. Eventually, a universal switch label will be used, at which time the API-1.5 and SPI control panels will be identical.

The layout of the API-1.5 control panel is shown in Figure 3-1. In addition to the switches and indicators, there is an easily-accessible jumper strip on the control panel. This permits selection of certain semi-permanent operating parameters by installation of jumper plugs between appropriate pins on the jumper strip. Table 3-1 lists the slide switch and jumper assignments on the API-1.5 control panel for each of the three different types of interface of the Model 630 API.

Table 3-1
SLIDE SWITCH AND JUMPER ASSIGNMENTS ON THE API-1.5 CONTROL PANEL

Slide Switch	RS-232-C	IEEE-488	Centronics
1	Wheel Type	Wheel Type	Wheel Type
2, 3	Spacing	Spacing	Spacing
4	Protocol	Primary	4 } Ignored
5	Baud Rate	Address	5 } Ignored
6, 7	Parity	Selection	6,7 } Ignored
8	Self Test	Self Test	Self Test
Jumper			
1	12" Page	12" Page	12" Page
2	Auto LF	Auto LF	Auto LF
3	Auto CR Disable	Auto CR Disable	Auto CR Disable
4, 5	Reserved	Reserved	Reserved

The function of each of the switches, indicators, and jumpers on the control panel is defined in the paragraphs that follow.

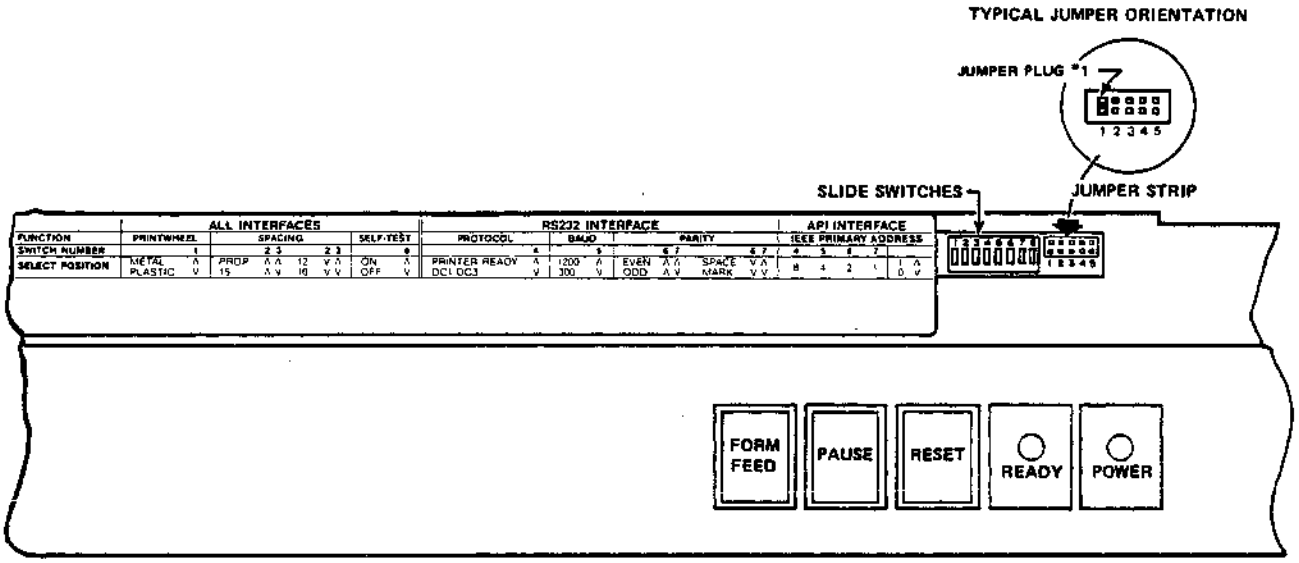

Figure 3-1. MODEL 630 API-1.5 CONTROL PANEL

3.2.1 Slide Switches

The label located to the left of the switch module identifies each switch by number and function, and lists the various settings for each switch. The arrowheads denote the position of the corresponding switch slider for each function.

Switch 1 - PRINT WHEEL Select

This switch sets the API to operate with either a Metal or Plastic print wheel. The switch setting selects between two internal lookup tables containing parameter values (hammer energies, PS units, spoke addresses) directly suitable for operation of the presently available Diablo print wheels listed below with their Diablo part numbers.

P/N	96-Char. Plastic	P/N	96-Char. Metalized
38101-01	Pica 10	311900-01	Titan 10
38102-02	Elite 12	311901-01	Cubic PS
38107-01	Courier 72	311903-01	Elite 12
38147	Forms Gothic S-10		

To accomodate print wheels that require parameter values different than those supplied by the two internal print wheel tables, a down-load procedure can be used to remotely load an appropriate print wheel table from the host computer to the Model 630. (See subsection 3.22)

Switches 2,3 - SPACING

The four combinations of settings of switches 2 and 3 provide selections for horizontal character spacing of 10, 12 and 15 characters/inch, and for proportional spacing. If the Horizontal Motion Index (HMI) is changed from its standard value, the SPACING switches are ignored.

Switch 4 - PROTOCOL (RS-232-C interface)

This switch selects between DC1/DC3 and Printer Ready protocols. (See subsection 3.6.) ETX/ACK protocol is also recognized under either position of this switch.

Switch 5 - BAUD (RS-232-C interface)

Selects either 300 or 1200 baud as the data transfer rate.

Switches 6,7 - PARITY (RS-232-C interface)

There are four combinations of settings for switches 6 and 7. Two combinations select Parity-On - Odd or Even. The other two combinations select Parity Off - Mark or Space. The Mark and Space selections determine whether the parity bit transmitted by the Model 630 is always a mark or always a space when parity is Off.

Switches 4,5,6,7 - PRIMARY ADDRESS SELECTION (IEEE-488 interface)

When the API is configured for the IEEE-488 interface, these four switches set the device address of the terminal. The terminal will enter the "Listen" state and accept data thru the interface only after receiving an address character that matches the setting of the four address selection switches.

Switch 8 - SELF-TEST

If this switch is in the ON position when power is applied, the Model 630 enters the self-test mode. The self-test consists of a ROM test, a RAM test and 96 lines of swirl text. See subsection 3.27 for further information regarding Self-Test.

3.2.2 Command Switches

FORM FEED - When this switch is pressed, a local form feed operation occurs without causing a form feed code to be transmitted through the interface. The form feed operation causes the paper to be moved upward so that the print head is positioned at the first line of the next page, or at the top margin line if one has been set.

PAUSE - This switch allows the operator to interrupt terminal operation without loss of data. Any command in process when the switch is pressed will be completed, but no new commands will be dequeued from the print buffer. No commands will be lost as long as communication protocols (ETX/ACK, DC1/DC3 or PRINTER READY) are observed. When the PAUSE switch is pressed, the READY light turns OFF. The terminal will resume normal operation when the RESET switch is pressed if no error conditions are present.

RESET - When pressed, this switch causes a restore operation if a Check condition is present. The flashing READY light, indicating an error condition, is cleared to its steady ON state.

3.2.3 Indicator Lights

POWER - ON when power is applied to the terminal.

READY - ON when no error conditions are detected.
OFF when in pause mode, or when DATA SET READY is false.
FLASHING when any of the following error conditions are present:

1. The printer is in check and printing is attempted.
2. A cover-open condition has been detected.
3. A paper-out conditon or end-of-ribbon condition has been sensed and printing is attempted.
4. Any of the following errors are detected:
   - Incorrect parity in received character.
   - A framing error (no stop bit) in received character.
5. Print Buffer overflow.

3.2.4 Control Panel Jumpers

The jumper positions are shown in Figure 3-1, along with an enlarged view showing the proper orientation of an installed jumper plug. Jumper plugs are available thru Diablo as Diablo part number 100398-01. In lieu of jumper plugs, a suitable jumper can also be formed by wire wrap connection.

Position	Function	In/Out	
1	12" PAGE SIZE	In	- Page size defaults to 12" (72 lines per page) when unit is initialized by: Power-up, ESC CR P, or ESC SUB I.
		Out	- Page size defaults to 11" (66 lines per page).
2	AUTO LINE FEED	In	- A line feed is performed with each carriage return (CR) character.
		Out	- Line feed occurs only on receipt of a line feed (LF) character.
3	AUTO CR DISABLE	In	- An automatic carriage return will not occur when attempting to print past the maximum right-hand horizontal position (i.e., 1572 1/120" increments).
		Out	- An automatic carriage return occurs when the carriage reaches the maximum horizontal position.

4 - RESERVED
5 - RESERVED

3.3 API-2 OPERATOR CONTROL PANEL

3.3.1 General

The operator control panel used on the Model 630 API-2 is basically the same as that used on the Model 630 HPRO5 terminals. The API-2 control panel uses an H5CPN circuit board assembly part number 302561-XX of -06 or higher design level. This circuit board is downward compatible with any H5CPN circuit board used on the Model 630 HPRO5 terminals. H5CPN circuit boards at design levels below 302561-06 cannot be used on the API-2 control panel.

The layout of the switches and indicators on the API-2 operator control panel is shown in Figure 3-2. The function of each of these items is described in the paragraphs that follow.

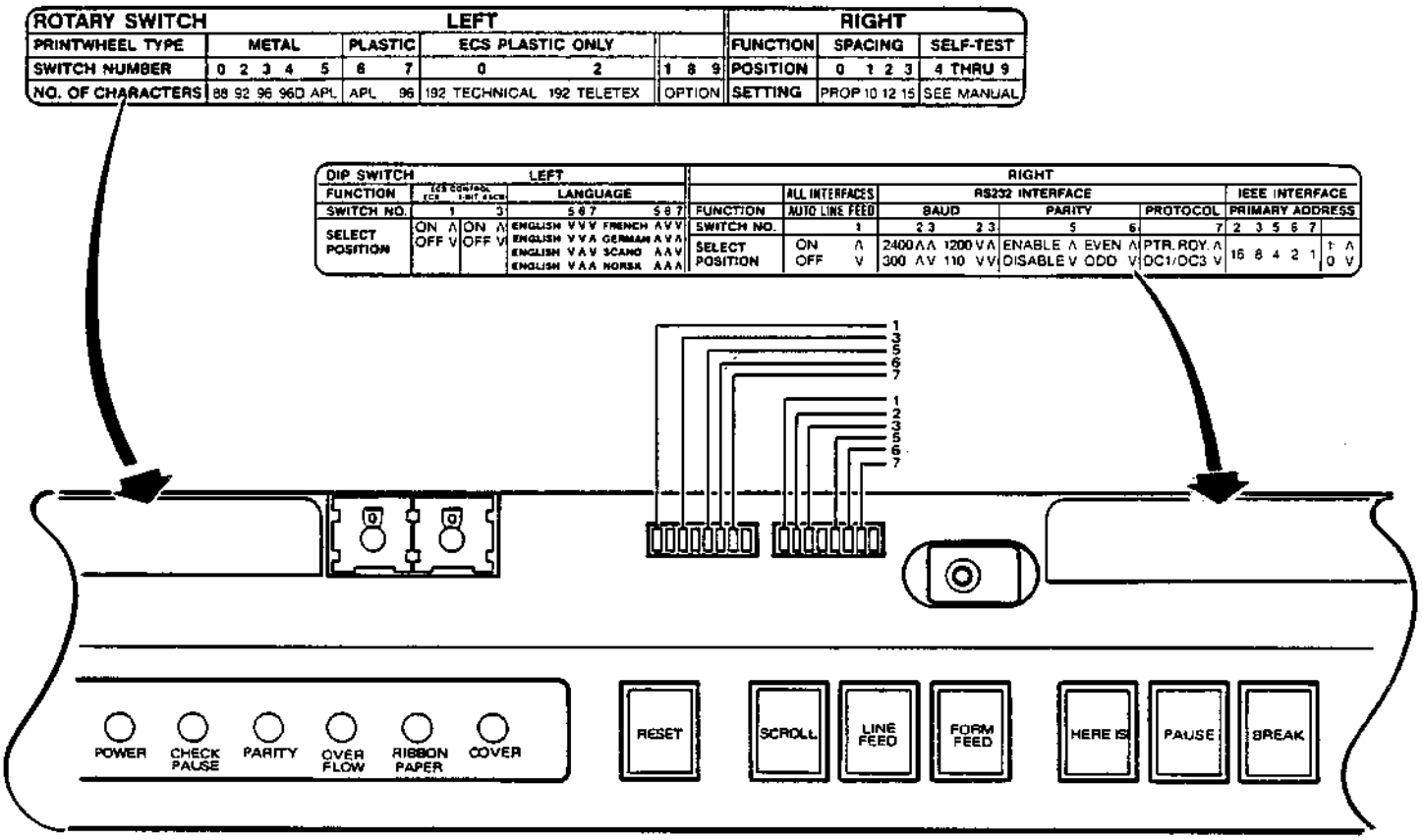

Figure 3-2. MODEL 630 API-2 CONTROL PANEL

3.3.2 The Mode Switches

The mode switches are located beneath the terminal's access cover. This group of switches is comprised of two rotary switches and two switch modules containing eight slide switches each.

Print Wheel Select (Left Rotary Switch)

Note: To prevent possible print wheel damage or excessive wear, this switch must be set to match the type of print wheel being used.

Position	Selection (Non-ECS mode)
0	88-character metal wheels - Xerox
2	92-character metal wheels - Rank Xerox
3	96-character metal wheels - Rank Xerox
4	96-character metal wheels - Diablo
5	APL metal wheels
6	APL plastic wheels
7	96-character plastic wheels
1,8,9	(Selection defaults to 88-character metal wheel - same as position 0)
	Selection (ECS mode)
0	ECS 192-character Scientific print wheel
2	ECS 192-character Teletex print wheel

In addition to setting the Print Wheel Select switch, the three Language Select switches (5, 6, and 7 on left slide switch module) must be set to the proper language selection for the print wheel being used when operating in non-ECS mode. In ECS mode, the Language switches are ignored. Subsection 4.1 in this manual lists the print wheel language groups directly supported by the API fimware.

Spacing Select Switch (Right Rotary Switch)

This switch selects the horizontal spacing for character printout, or selects self-test mode.

Position	Selection
0	Proportional spacing
1	10-pitch spacing
2	12-pitch spacing
3	15-pitch spacing
4-9	Self-Test (The terminal enters self-test mode if the spacing select switch is in one of these positions at power-up.

Left-Hand Slide Switch Module

Switch 1 - ECS Select

ON - The API is configured as an ECS (Extended Character Set) terminal.

OFF - The API is configured as a non-ECS terminal.

Switch 3 - 8-Bit ASCII

This switch is used to support extended character set operation in the Model 630 ECS. See subsection 3.29 of this manual for additional information regarding use of this switch for ECS operation.

Switches 5,6,7 - Language Select

These three switches work in conjunction with the Print Wheel Select switch to select the proper table of print

wheel operating parameters to match the print wheel being used. Language selection is as follows:

Switch 5	6	7	Language
0	0	0	English
0	0	1	English
0	1	0	English
0	1	1	English
1	0	0	French
1	0	1	German
1	1	0	Scandia
1	1	1	Norsk

0=OFF, 1=ON

When the ECS Select switch is set to ON, the language select switches are ignored.

Right-Hand Slide Switch Module

Switch 1 - Auto Line Feed
When this switch is ON, a line feed occurs automatically on every carriage return.

The functions of switches 2, 3, 5, 6, and 7 differ as defined below, according to whether the API is configured for RS-232-C type interface or for IEEE-488 type interface. For the Centronics type interface, these switches are ignored.

Switches 2,3 - Baud (RS-232-C Interface)
When the API is configured for RS-232-C interface, these two switches select the data transfer speed at which the API will operate, as defined below.

Switch 2	3	Baud
0	0	110
0	1	1200
1	0	300
1	1	2400

Switch 5 - Parity Enable (RS-232-C Interface)
When the API is configured for RS-232-C interface, this switch enables parity checking.

Switch 6 - Parity Odd/Even (RS-232-C Interface)
When the API is configured for RS-232-C interface, and the Parity Enable switch is ON, this switch selects either odd or even parity. If the Parity Enable switch is OFF, this switch determines whether the transmitted parity bit is always a space (odd) or always a mark (even).

Switch 7 - Protocol (RS-232-C Interface)

When the API is configured for RS-232-C interface, this switch selects between DC1/DC3 and Printer Ready protocols (see subsection 3.6). ETX/ACK protocol is also recognized under either position of this switch.

Switches 2,3,5,6,7 - Primary Address (IEEE-488 Interface)

When the API is configured for IEEE-488 type interface, these five switches set the device address (0-30) of the API terminal. In the idle state, the API is normally in the "unlisten" mode. If the host system drops the -ATN signal and places a device address code on the data bus that matches the address set by the switches on the API control panel, the API enters the listen mode. To return the API to the unlisten mode, the host places a code 3F hex (0011 1111) on the data bus while holding the -ATN signal LO. Table 3-2 lists the available device addresses and corresponding address codes.

All secondary addresses will be accepted if sent, although secondary addresses serve no purpose in the Model 630 API.

3.3.3 The Operating Switches

The seven operating switches are located in the right-hand area of the control panel, accessible to the operator with all covers on the machine. These are momentary-action, membrane-type switches, actuated by finger touch.

RESET - When pressed, this switch causes a restore operation if a Check condition is present. All of the error indicators are cleared. This switch also restarts the unit after the PAUSE switch interrupts operation.

SCROLL - When pressed and released, the Scroll switch causes the paper to advance a small amount to give the operator a clear view of the last printed line. Before printing resumes, the paper is automatically returned to the last printing position.

LINE FEED - Initiates a single line feed. If the switch is held depressed longer than 600 msec, the line feed will be repeated. It does not cause a line feed code to be transmitted thru the interface.

FORM FEED - Initiates a form feed to the next top-of-form position, without transmitting a form feed code. The form feed operation causes the paper to be moved upward so that the print head is positioned at the first line of the next page, or at the top margin line if one has been set.

PAUSE - This switch allows the operator to interrupt terminal operation without loss of data. Any command in process when the switch is pressed will be completed, but no new commands will be dequeued from the print

Table 3-2
IEEE-488 PRIMARY LISTEN ADDRESSES

Control Panel Switches (Binary) 16	8	4	2	1	Device Address (Decimal)	Address Code* (Hexadecimal)
0	0	0	0	0	00	20
0	0	0	0	1	01	21
0	0	0	1	0	02	22
0	0	0	1	1	03	23
0	0	1	0	0	04	24
0	0	1	0	1	05	25
0	0	1	1	0	06	26
0	0	1	1	1	07	27
0	1	0	0	0	08	28
0	1	0	0	1	09	29
0	1	0	1	0	10	2A
0	1	0	1	1	11	2B
0	1	1	0	0	12	2C
0	1	1	0	1	13	2D
0	1	1	1	0	14	2E
0	1	1	1	1	15	2F
1	0	0	0	0	16	30
1	0	0	0	1	17	31
1	0	0	1	0	18	32
1	0	0	1	1	19	33
1	0	1	0	0	20	34
1	0	1	0	1	21	35
1	0	1	1	0	22	36
1	0	1	1	1	23	37
1	1	0	0	0	24	38
1	1	0	0	1	25	39
1	1	0	1	0	26	3A
1	1	0	1	1	27	3B
1	1	1	0	0	28	3C
1	1	1	0	1	29	3D
1	1	1	1	0	30	3E
1	1	1	1	1	UNL (Unlisten)	3F

* The Hexadecimal code that the host must send to select the device.

NOTE: 1 = ON or TRUE
0 = OFF or FALSE

buffer. No commands will be lost as long as communication protocols (ETX/ACK, DC1/DC3 or PRINTER READY) are observed. The pause mode causes the PRINT CHK light to blink. Printer operation resumes and the PRINT CHK light turns OFF when the RESET switch is pressed if all error conditions are cleared.

BREAK - Causes a Break (250 msec space) to be transmitted over the communications link. Whenever the BREAK switch is pressed, the print buffers are emptied. Also, Graphics mode is cleared and Forward Printing mode is established. Red/black ribbon state and remote HMI are unchanged.

3.3.4 The Front Panel Indicators

3.3.4.1 Audio Alarm

This device sounds briefly to indicate the occurrence of various errors or operating conditions. All error conditions cause the alarm to sound for 1/2 second when the error is first detected. The alarm will not sound again for that error until the RESET key is pressed, clearing the error. The alarm also sounds briefly each time one of the control panel operating switches is pressed. This provides audible feedback to the operator, confirming switch actuation.

3.3.4.2 Indicator Lamps

POWER - Indicates that AC power is applied to the machine.

PRINT CHK - In its steady ON state, this light indicates that a print operation has been called for while the printer is in a "check" condition. A check condition occurs when a print wheel or carriage command received by the printer cannot be successfully completed, due to a malfunction (possibly caused by a paper jam or bent print wheel). A print wheel check condition disables the print wheel servo and a carriage check condition disables the carriage servo, until a restore operation is performed.

When blinking, the PRINT CHK light indicates that the terminal is in the Pause mode.

PARITY - Indicates detection of either of the following types of errors:
- Incorrect parity sensed on a received character.
- A framing error (no stop bit) detected on a received nonbreak character.

A (?) character is substituted for the erroneous character. This light functions only if the PARITY ENABLE switch is ON.

OVFL - Indicates print buffer overflow.

RIBBON/PAPER - Indicates that either a paper-out or end-of-ribbon condition has been sensed and an attempt to print has been made.

COVER - The COVER light comes on immediately when the sound panel is opened.

3.4 CONTROL CODES

The Model 630 responds to a standard set of ASCII Control Codes. The control characters recognized by the Model 630 API are summarized below. The standard ASCII Code Chart shown in Figure 4-1 lists the control characters and their corresponding ASCII codes. The operator, however, normally need not be concerned with the actual codes for the control characters.

ACK - This code is used in conjunction with ETX for the ETX/ACK communications protocol. (See subsection 3.6.1)

BEL - Sounds audible alarm (buzzer) for 1/2 second. Updates all summarized motion and suspends processing of further characters until all printer activity is complete.

BS - Backspaces the carriage one print position (HMI) in Normal mode, or 1/60 inch in Graphics mode. Direction of movement reverses in the Backward Print mode.

CR - Causes a carriage return. If the AUTO LF switch is ON, the CR code also causes a line feed operation.

DC1 - This code is used in conjunction with DC3 for communications protocol. (See subsection 3.6.2)

DC3 - This code is used in conjunction with DC1 for communications protocol. (See subsection 3.6.2)

DC4 - This code is used to exit from the print wheel table down-load mode.

DEL - This code is ignored by the Model 630 API. It can be used as a buffer or "sluff" code the same as NUL.

ETX - This code is used in conjunction with ACK for the ETX/ACK communications protocol. (See subsection 3.6.1)

ESC - This code is always received as the first character of a 2- or 3-character command sequence. (See subsection 3.5)

FF - Initiates form feed to the top of the next form (page), or to the top margin on the next form or page if one has been set.

HT - Initiates movement of the carriage to the next previously-set horizontal tab stop.

LF - Initiates movement of the paper up one line (one VMI). Movement changes to 1/48" per command in the Graphics mode.

NAK - Transmitted by the Model 630 when certain error conditions occur. (See subsection 3.6.2)

NUL - This code is ignored by the Model 630 in all modes. It can be used as a buffer or "sluff" code.

SI - Causes exit from Program mode; or used to select ECS primary character set.

SO - Causes API to address the supplementary character set of the ECS print wheel, when used in ECS mode and 7-bit ASCII format.

SP - Causes carriage movement of one print position (HMI) in Normal mode.

VT - Initiates movement of the paper up to the next previously-set vertical tab stop.

3.5 ESCAPE CODE SEQUENCES

The Escape mode is entered by receiving the ESC control code over the communications interface. This code is always received as the first character of a 2- or 3-character "Escape Code Sequence". The ESC code conditions the Model 630 to receive the next one or two characters, uninterrupted by a CR, as commands and not print data. Upon receiving the last character in the ESC code sequence, the Model 630 executes the command, and then terminates the Escape mode.

The following list summarizes the ESC code command sequences. The ESC sequences marked by an asterisk (*) are recognized by the API-2 only.

	Characters		
(1)	(2)	(3)	Description of Command
ESC	1		Set horizontal tab stop at current carriage (print) position
ESC	2		Clear all horizontal and vertical tabs
ESC	3		Graphics mode ON (clear with CR)
ESC	4		Graphics mode OFF
ESC	5		Forward Print mode ON
ESC	6		Backward Print mode ON (clear with CR)
* ESC	7		Print Suppression ON (clear with CR)
ESC	8		Clear the individual horizontal tab stop at the current carriage (print) position.
ESC	9		Set left margin at current carriage (print) position
ESC	0		Set right margin at current carriage (print) position
ESC	HT	(n)	Initiate absolute horizontal tab to print position (n)**
ESC	LF		Perform negative line feed
ESC	VT	(n)	Initiate absolute vertical tab to line (n)**
ESC	FF	(n)	Set lines per page to (n)**
ESC	-		Set vertical tab stop at current paper position
ESC	CR	P	Initiate Remote RESET (Allow 1 second for completion before next command.)
ESC	RS	(n)	Set Vertical Motion Index (VMI) to (n-1)***
ESC	US	(n)	Set Horizontal Motion Index (HMI) to (n-1)***
ESC	A		Print in secondary color (red - ribbon down) (Non-ECS option)
ESC	B		Print in primary color (black - ribbon up) (Non-ECS option)
ESC	SO	DC2	Enter Print Wheel Table Down-Load mode (Exit by DC4)
ESC	C		Clear top and bottom margins
ESC	D		Perform negative half-line feed
ESC	U		Perform half-line feed

** See subsection 4.5, Table 4-4 for values of (n).
*** See subsection 4.5, Table 4-3 for values of (n).

	ESC	L		Set lower page margin at current paper position
	ESC	T		Set top page margin at current paper position
	ESC	Y		Print the print wheel character under ASCII Code 20_{16}
	ESC	Z		Print the print wheel character under ASCII Code $7F_{16}$
	ESC	/		Enable Auto Backward Printing mode
	ESC	\		Disable Auto Backward Printing mode
	ESC	S		Set HMI to value defined by setting of SPACING switch
	ESC	CAN	CAN	Toggles SRQ line for print speed timing (see subsection 3.28)
*	ESC	>		Enable Normal Printing mode
*	ESC	<		Enable Reverse Printing mode
*	ESC	?		Enable Auto Carriage Return mode
*	ESC	!		Disable Auto Carriage Return mode

Word Processing Features

	ESC	P		Proportional Space ON (cleared by ESC S)
	ESC	Q		Proportional Space OFF
	ESC	DC1	(n)	Offset selection (cleared by CR) See subsection 3.24.2
	ESC	E		Auto Underscore ON
	ESC	R		Auto Underscore OFF
	ESC	O		Bold Print ON (cleared by CR)
	ESC	W		Shadow Print ON (cleared by CR)
	ESC	&		Bold/Shadow Print OFF
	ESC	%		Extend carriage settling time for best print quality
	ESC	BS		Backspace 1/120"
	ESC	SO	M	Program mode ON
	ESC	X		Cancel all WP modes except Proportional Space
	ESC	=		Auto Center ON (cleared by CR)
	ESC	M		Auto Justify ON

Feeder Control Features (API-2 only)

*	ESC	EM	E	Feed envelope
*	ESC	EM	1	Feed sheet 1
*	ESC	EM	2	Feed sheet 2
*	ESC	EM	R	Eject paper from printer

Remote Diagnostics Features

Also see subsection 3.23

	ESC	SUB	I	Initialize the printer
	ESC	SUB	R	Remote error reset
	ESC	SUB	1	Request Status Byte 1
*	ESC	SUB	3	Request Status Byte 3
	ESC	SUB	SO	Memory test

HyPlot Features (API-2 only)

*	ESC	G		HyPLot ON - Absolute Move (cleared by CR)
*	ESC	G	BEL	HyPlot ON - Absolute Plot (cleared by CR)
*	ESC	V		HyPlot ON - Relative Move (cleared by CR)
*	ESC	V	BEL	HyPlot ON - Relative Plot (cleared by CR)
*	ESC	.	'character'	Change plot character to 'character'
*	ESC	,	hv	Set plot precision (see subsection 3.25)
*	ESC	4		Exit HyPlot mode

NOTE: * = API-2 only

3.6 SERIAL RS-232-C COMMUNICATIONS PROTOCOLS

The communications protocols prevent print buffer overflow when print data is being received faster than the print buffer is being emptied. The Model 630 requires a communications protocol at all baud rates above 300, and in some applications at and below 300 baud.

The 2-position Protocol switch on the control panel enables selection of DC1/DC3 or Printer Ready communications protocol. ETX/ACK protocol can also be used simultaneous with either DC1/DC3 or Printer Ready. In addition to print buffer control, the DC1/DC3 and Printer Ready protocols also respond to error conditions within the Model 630.

3.6.1 ETX/ACK Protocol

The Model 630 API will respond also to this protocol when the Protocol switch is set for either DC1/DC3 or Printer Ready protocol. When the host computer sends a string of print data to the terminal, it includes an ETX control code character at the end of the data string. When the ETX character eventually is retrieved from the print buffer, the Model 630 transmits an ACK character back to the host. The ACK character indicates that the terminal is ready to accept more data. With this protocol, the host must ensure that any data string transmitted does not exceed the capacity of the print buffer, since the terminal does not send a response to indicate when the print buffer is nearly full.

3.6.2 DC1/DC3 (XON/XOFF) Protocol

In DC1/DC3 protocol, a DC3 control code character is transmitted by the Model 630 under any of the following conditions:

1. Print buffer nearly full (within 64 bytes)
2. Cover Open
3. Paper Out *
4. End of Ribbon *
5. Printer in Check condition

* With Paper Out or End of Ribbon, a DC3 is sent only when printing is attempted.

With DC1/DC3 protocol enabled, a NAK character will be transmitted (in addition to DC3) for conditions 2 - 5 above. The NAK character thus distinguishes the "error" conditions from Print Buffer Full. NAK is also sent when a parity error is detected if parity checking is enabled.

Once a DC3 has been sent, the Model 630 will transmit a DC1 character when the print buffer is nearly empty (within 64 bytes) and conditions 2 thru 5 do not exist. Conditions 2 thru 5 can be cleared by pressing the RESET switch on the control panel, which also causes a DC1 character to be transmitted.

3.6.3 Printer Ready Protocol

The Printer Ready protocol uses a dedicated interface line instead of special control characters (as used with DC1/DC3 and ETX/ACK protocols). When the Protocol switch is set for Printer Ready, the Data Terminal Ready (+DTR) interface signal goes LO under any of the following conditions:

1. Print buffer becomes nearly full (within 64 bytes)
2. Cover Open
3. Paper Out*
4. End of Ribbon*
5. Printer in Check condition

* With Paper Out or End of Ribbon, +DTR goes LO only when printing is attempted.

The +DTR signal returns HI when the print buffer becomes nearly empty (within 64 bytes) and all the other conditions are corrected. When the Protocol switch is not set for Printer Ready protocol, the +DTR interface signal is at a continuous HI level.

3.7 IEEE-488 INTERFACE PROTOCOL

See subsection 1.4 of this manual.

3.8 CENTRONICS INTERFACE PROTOCOL

See subsection 1.5 of this manual.

3.9 PRINTING FORMAT

Printing format is dependent on three primary factors; horizontal character spacing, vertical line spacing, and number of lines per page. Each of these factors can be independently controlled. An "index" is used to define the specific motion desired for both horizontal character spacing and vertical line spacing. Any point on a page can be defined in terms of a "horizontal position" and a "vertical position". The number of lines per page can easily be changed when necessary.

3.9.1 Definition of Terms

Figure 3-8 and the text below describe some of the points associated with a simple page layout.

ORIGIN: The position of the print head after a form feed (with no top margin set) and an absolute horizontal tab to print position 1 (horizontal position 0). The first print position on the first line of a page.

HORIZONTAL MOTION INDEX (HMI): Determines the distance, in multiples of 1/120", that the carriage moves after printing a character (or when spacing). Minimum HMI is 0, maximum is 125; thus, minimum distance is 0 x 1/120" and maximum is 125 x 1/120" (1.04" nominal).

VERTICAL MOTION INDEX (VMI): Determines the distance, in multiples of 1/48", that the paper (platen) moves for each line feed, negative line feed, etc. Minimum VMI is 0, maximum is 125; thus, minimum distance is 0 x 1/48" and maximum is 125 x 1/48" (2.6" nominal). When VMI = 0, no paper movement occurs.

ABSOLUTE HORIZONTAL POSITION: The horizontal distance, in 1/120 inch increments, between the print head position and the origin. Minimum absolute horizontal position is 0, maximum is 1572 (13.1" x 120).

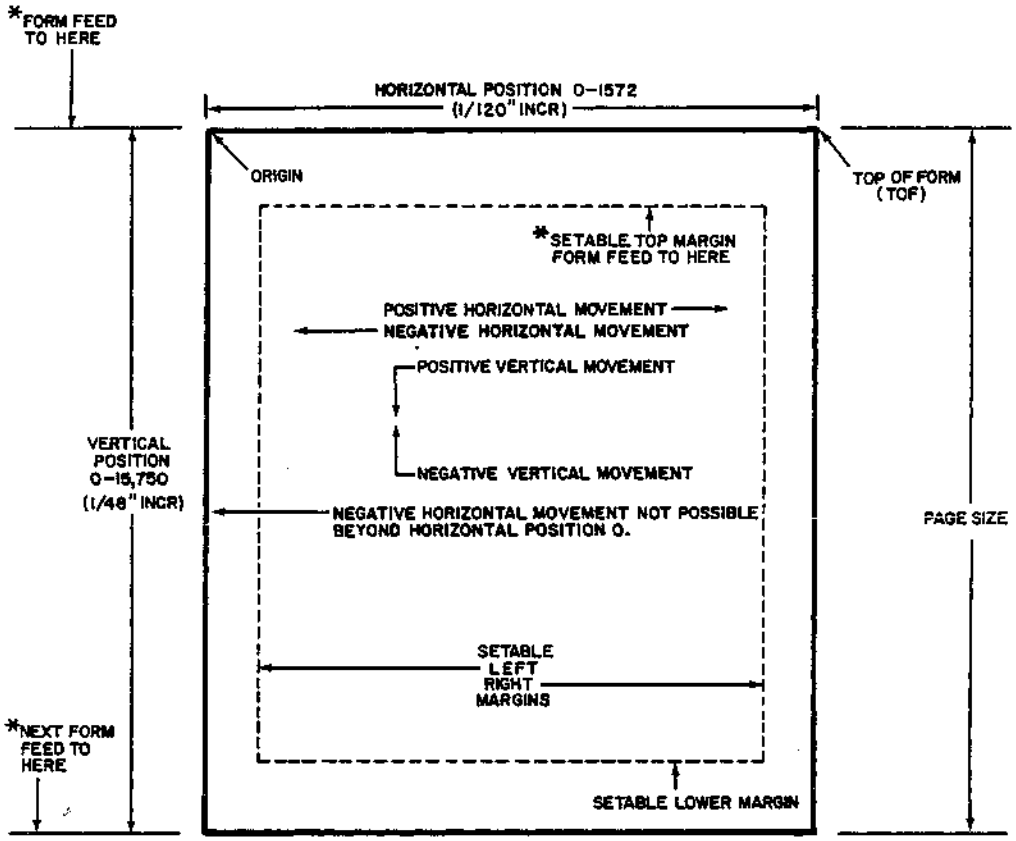

Width of Print Position = Horizontal Motion Index (HMI) and is variable from 0 to 125 (1/120") increments.

Print Position Number = $\frac{\text{Horizontal Position}}{\text{HMI}} + 1$ = Horizontal Tab Position. Tab Positions limited to first 160 Print Positions.

Height of Line = Vertical Motion Index (VMI) and is variable from 0 to 125 (1/48") increments.

Line Number = $\frac{\text{Vertical Position}}{\text{VMI}} + 1$ = Vertical Tab Position. Total number of lines can be specified from 1 to 126.

Page Size = Number of lines x VMI.

* If a top margin is set, the Form Feed will advance beyond the Top of Form to the top margin.

Note: *Movement* arrows depict carriage movement relative to paper and not actual paper movement direction.

Figure 3-3. PAGE LAYOUT AND PRINTING FORMAT

ABSOLUTE VERTICAL POSITION: The vertical distance, in 1/48 inch increments, between the current print line and the first line on the page (the origin). Minimum absolute vertical position is 0, maximum is 15,750 (125 x 126 lines per page).

PRINT POSITION: The horizontal area capable of being occupied by a single printed character. This is similar to a print "column" on a line printer, except that it is variable. That is, the number of print positions per line is dependent on the HMI. The minimum number of print positions per line is 13 when HMI = 125, the maximum is 1573 when HMI = 1. The leftmost print position is position 1. Print position may be calculated as follows:

$$\text{Print Position} = \frac{\text{Horizontal Position}}{\text{HMI}} + 1$$

LINE: The vertical distance capable of being occupied by a row of printed characters. The height of the line is equal to VMI. Line number may be calculated as follows:

$$\text{Line Number} = \frac{\text{Vertical Position}}{\text{VMI}} + 1$$

LINES PER PAGE: The actual number of print lines per page of paper. Lines per page can be set to any number from 1 thru 126.

3.9.2 Standard Formats

Any one of three standard formats can be selected via the SPACING switch on the control panel. These formats are summarized in Table 3-3.

Whenever the SPACING switch is repositioned and an optional format has not been selected, the values listed in the table for the new position are used for horizontal and vertical spacing, and for lines per page.

Additional formats can be obtained by changing the HMI, VMI, or Lines Per Page. Such variable indexing overrides the SPACING switch function. Control can be restored to the SPACING switch by issuing the ESC S sequence.

Table 3-3
STANDARD PRINTING FORMATS

	Horizontal Spacing			Vertical Spacing		
SPACING Switch	Char/in.	Char/line	HMI	Lines/in.	Lines/page	VMI
10	10	132	12	6	66	8
12	12	158	10			
15	15	197	8			

3.9.3 Proportional Space Printing

The proportional space mode facilitates use of proportional space (PS) print wheels on the Model 630. The print wheel lookup tables stored in the memory of the Model 630 include PS unit values. These PS unit values represent one-half the width required by each proportionally spaced character. Carriage movement during proportional space printing is controlled by printing each character in the sequence: Move-Print-Move; where the amount of "Move" is specified by the PS unit value assigned to that character. The letter "V", for example, has a PS value of 6, which is one-half of the 12/120" spacing a "V" requires. The "V", therefore, would be printed in the sequence: Move 6/120" - Print - Move 6/120". The sequence for printing an "i" (PS value 3) following the "V" would be: Move 3/120" - Print - Move 3/120". The total distance between the centerline of the "V" and centerline of the "i" would be 6/120" + 3/120" = 9/120".

In fixed pitch mode, the printing sequence is Print-before-Move. The size of the Move is determined by the current active HMI value, which is selected by the SPACING switch on the control panel, or by remote HMI mode (see subsection 3.9.4.1).

The proportional space mode is selected by the SPACING switch on the control panel, unless the terminal is in the remote HMI mode, in which case the SPACING switch is ignored. When proportional spacing is selected by the SPACING switch, the HMI automatically goes to 12 pitch.

The proportional space mode may also be selected by the sequence ESC P, and turned off by the sequence ESC Q. Once the ESC P sequence has been received, the SPACING switch will be ignored and proportional spacing is used. When the ESC Q sequence is received, the Model 630 exits the proportional space mode, and horizontal spacing is then determined by the current HMI value until an ESC S sequence is received. An ESC S sequence returns control to the SPACING switch.

Entering and leaving proportional space mode via the Escape sequences does not change the HMI to 12 pitch as happens when proportional space selection is made by means of the SPACING switch. During proportional space mode, the HMI affects only tabbing and word space size (space and backspace).

There are times when certain data needs to be printed nonproportionally spaced even though a PS print wheel is being used. For example, when the display from a video terminal is to be printed to illustrate a document; if it is printed proportionally spaced, the columnar alignment of the information is lost. To avoid this, issue the ESC Q sequence to exit the proportional space mode, then issue an ESC US DLE sequence to set the HMI to 15 which is adequate to print all characters on the PS print wheel without any characters touching. When the nonproportionally spaced printing has been completed, revert to normal HMI by executing the ESC S sequence, and return to proportional space mode by executing an ESC P sequence.

All numeric characters have the same PS unit value (5). This allows numeric data to be printed aligned in columnar form without having to turn off proportional space printing. The starting position of the columns can be established by setting a tab at that position, and tabbing to it, or by using the absolute horizontal tab to move to the starting position (see subsection 3.13.1). If you are altering the value of the HMI during the print of each line, be sure that the HMI has the same value prior to each movement to the beginning of the column, to ensure that the starting position does not change.

3.9.4 Optional Formats (Variable Indexing)

Any of the three format factors can be altered by utilizing special escape (ESC) sequences. The ESC CR P (Remote Reset) sequence may also be used here to cancel all optional format factors and return to the format selected by the SPACING switch. Refer to subsection 3.5 for a detailed list of all ESC sequences.

Execution of any of these sequences does not immediately alter horizontal or vertical position. It does, however, change subsequent operations by redefining the variable format factors. It is recommended that a Form Feed (FF) and an Absolute Tab (see subsection 3.13) to location 0 be performed prior to changing any format factors.

3.9.4.1 Variable HMI (Remote HMI Mode)

The standard HMI can be altered by executing the 3-character sequence ESC US (ASCII character), where the binary value of the selected ASCII character is one (1) greater than the number of 1/120 inch increments the carriage will move after print-

ing a character or when spacing. This places the terminal in the remote HMI mode.

HMI = (ASCII character - 1) x 1/120 inch

NUL and DEL characters cannot be used, therefore the minimum HMI is 0 increments, and the maximum is 125 increments. See subsection 4.5, Table 4-3, to determine the appropriate ASCII character for the ESC sequence. While the terminal is in remote HMI mode, the SPACING switch is ignored. An ESC S sequence will return control of HMI to the SPACING switch.

3.9.4.2 Variable VMI (Remote VMI Mode)

The standard VMI can be altered by executing the 3-character sequence ESC RS (ASCII character), where the binary value of the ASCII character is one (1) greater than the number of 1/48 inch increments the paper is to move for each line feed, negative line feed, etc.

VMI = (ASCII character - 1) x 1/48 inch

Minimum VMI is 0, maximum is 125. See subsection 4.5, Table 4-3, to determine the appropriate ASCII character for the ESC sequence.

3.9.4.3 Lines Per Page

Lines per page is automatically set at 66 (or 72 if so jumpered on API-1.5 control panel) when the terminal is initialized (restored at power up). NOTE: There is no provision for automatic default to 12" (72 lines) page size in the API-2. The number of lines per page can be altered in ASCII mode by executing a 3-character sequence ESC FF (ASCII character) where the binary value of the ASCII character is equal to the number of lines per page desired. The minimum number of lines per page is 1, the maximum number is 126.

The following two formulas can be used to compute the desired number of lines per page:

Lines Per Page = Number of Lines Per Inch x Page Size in Inches

$$\text{Number of Lines Per Inch} = \frac{48}{\text{VMI}}$$

Once the desired number of lines per page is known, use the information in subsection 4.5, Table 4-4, to determine the appropriate character for the ESC sequence.

3.10 FORWARD/BACKWARD PRINTING

The Model 630 is capable of printing forward (left to right) or backward (right to left) with equal ease. It is capable of both Automatic and Programmed backward printing. The API-2 can also operate in an Inverted Horizontal Motion mode.

3.10.1 Auto Backward Printing

Auto backward printing is enabled by the sequence ESC /. It is disabled by the sequence ESC \ . When the Model 630 is operating in the Auto Backward Printing mode, a line of text will be printed in the reverse direction only if all of the

following conditions exist:

1. Auto backward printing is enabled.
2. Printing is at least one line behind print-queued data.
3. It is a shorter distance for the carriage to move to the right-hand end of the next line than to move to the left-hand end.
4. No ESC sequences are in effect.

Programmed Backward Printing can override Auto Backward Printing for a single line.

3.10.2 Programmed Backward Printing

This mode is entered by receiving the sequence ESC 6 from the communications link. An ESC 5 sequence or a Carriage Return will re-establish the forward printing mode.

During Backward Printing, each character printed causes incremental carriage movement to the left, just opposite of carriage motion during forward printing. The action of the Space and Backspace keys and codes are also reversed in Backward Printing. Note, however, that tabbing operations, carriage return, and all paper movement functions are unaffected by being in the Backward Print mode.

3.10.3 Inverted Horizontal Motion (API-2 only)

For foreign languages and any other application requiring reversal of the entire page format, the sequence ESC < will establish the Inverted Horizontal Motion mode. In this mode, all horizontal motion is inverted, including tabbing. The carriage home position is redefined as the rightmost carriage position. The starting point for each line is considered to be at the right margin instead of at the left margin.

Backward printing can also be performed when operating in the Inverted Horizontal Motion mode. In this case, backward printing is defined as printing from left to right. Normal left to right printing (Forward Printing) can be re-established by the sequence ESC > .

3.11 PRINT SUPPRESSION (API-2 only)

Print suppression is initiated by the sequence ESC 7, and cancelled by a carriage return (CR) command. While this feature is enabled, all printable characters are replaced by spaces. Escape sequences and control characters are not affected.

3.12 CONTROL OF MARGINS

3.12.1 Horizontal Margins

Both left and right margins can be set remotely by positioning the carriage to the desired print position, and then sending an ESC 9 or ESC 0 (LEFT MAR or RIGHT MAR) sequence. Altering the left margin causes the carriage to return to the new print position setting following a carriage return (CR) command.

When the left margin is set at some print position other than 1, the carriage can be moved to the left of the margin by horizontal tabbing, by backspacing, or by spacing in the Backward Print mode.

A power-on initialize or a remote reset operation will automatically clear the left margin to horizontal position 0 and the right margin to horizontal position 1572.

3.12.2 Vertical Margins

Both top and bottom vertical margins can be adjusted by first placing the paper in the top-of-form position, then moving the paper up with a series of LINE FEED operations to reach the desired top margin position. This "Top Margin" is then set by executing an ESC T sequence. Advancing the paper with LINE FEED operations to the desired "Bottom Margin" position, and then executing an ESC L sequence sets the bottom margin. The bottom margin must always be set below the upper margin, and both must be within the page size boundaries.

Whenever a lower page margin is crossed with a line feed, auto line feed or half line feed, paper movement automatically positions the print head at the top margin on the next page, eliminating the need for a form feed character. The area between the lower margin of one page and the top margin of the next page can be accessed through vertical tabs (absolute and normal), and through negative line feeds.

Top and bottom margins are reset to the top-of-form and bottom-of-page locations whenever page size is altered, or a remote Reset is received. They are also reset (or initialized) on power-up, or upon receipt of a remote ESC C command.

3.13 TABBING

There are two methods of tabbing for both horizontal and vertical motion. The method called "Normal Tab" is available only on the API-2. Normal Tab is similar to the traditional system used on typewriters in that tab stops are set at predetermined positions. The carriage or paper then moves to these positions sequentially on command. The second method, termed "Absolute Tab" is available on both the API-1.5 and API-2. The Absolute Tab method is unique in that it does not require prior setting of tab stops. The carriage or paper is positioned directly to any one of 126 possible positions either horizontally or vertically from any other position. In the case of vertical tabbing, the paper should be moved "forward only", unless the unit is equipped with optional bidirectional paper handling accessories.

Both methods of tabbing provide horizontal and vertical positioning to standard print positions or lines. This makes it possible, by using variable indexing, to print data out in any format desired without prior editing. For example, data that was originally formatted for 10 characters per inch, 6 lines per inch, can be printed out at 12 characters per inch, 4 lines per inch (or any other format), and all tabular material will remain in the same relative position.

The method of tabbing to be used is specified by the character sequence used. The Horizontal Tab (HT) character or Vertical Tab (VT) character alone executes a Normal Tab operation. An ESC HT or ESC VT sequence, plus an ASCII character executes an Absolute Tab.

Since tabbing provides positioning only to normal print positions and lines, finer positioning requires use of the Graphics mode. All tabbing functions are unchanged in Graphics mode.

3.13.1 Absolute Horizontal Tab

Using Absolute Tab, the carriage can be positioned directly to any of the first 126 print positions without the need for prior setting of tab stops. Since Absolute Tab Stops are not retained in memory, each stop must be commanded anew each time it is to be used. The command sequence for this is ESC HT (ASCII character), where the value of the ASCII character indicates the print position desired. See subsection 4.5, Table 4-4, to determine the appropriate ASCII character for the ESC sequence.

The leftmost print position is considered to be binary location 1. Any ASCII character other than NUL and DEL can be used, enabling direct tabbing to any of the first 126 print positions. Note that this method of tabbing also permits tabbing leftward. The horizontal position at the completion of an Absolute Tab operation is computed as follows:

Horizontal Position = (ASCII character - 1) x HMI

3.13.2 Absolute Vertical Tab

Using Absolute Vertical Tab, the paper can be moved to any of the 126 possible lines on the page from any other line on the page. Absolute Vertical Tab is initiated by executing the sequence ESC VT (ASCII character), where the value of the ASCII character chosen determines the number of the line to be reached. See subsection 4.5, Table 4-4, to determine the appropriate ASCII character for the ESC sequence. NUL and DEL are not used. The top line on the page is assigned the binary value of 1, with each succeeding line down the page assigned the next higher number. It is impossible to tab beyond the end of the page even if the number of lines per page is less than the maximum 126. The actual amount of paper movement is determined by; (a) the paper position before VT execution, (b) the ASCII character used, and (c) the Vertical Motion Index (VMI). The ultimate position reached is determined as follows:

Vertical Position = (ASCII character - 1) x VMI

3.13.3 Normal Horizontal Tab (API-2 only)

Horizontal tab stops can be set at any print position up to position 160 by positioning the carriage to the desired print position and executing an ESC 1 sequence. Keeping in mind that tab stops can only be set at the first 160 print positions, the formula for determining a tab position is:

$$\text{Horizontal Tab Position (1 thru 160)} = \frac{\text{Horizontal Position}}{\text{HMI}} + 1$$

A TAB command automatically causes the carriage to move to the next sequential tab stop. Should a TAB move be commanded with no tab stop having been set to the right of the present carriage position, the carriage will not move and the alarm (API-2 control panel only) will sound. Individual horizontal tab stops can be cleared by first positioning the carriage to that print position and then executing an ESC 8 sequence. All tab stops, both horizontal and vertical, can be cleared simultaneously by executing an ESC 2 sequence.

3.13.4 Normal Vertical Tab (API-2 only)

Vertical tabs are set with reference to the top-of-form position. This position, the first print line on the page, is reached by a keyboard FORM FEED command, followed by a manual adjustment of the paper location vertically to locate the paper in proper position. Vertical tab stops may then be set at any other line on the page by first moving the paper to the desired line by means of a series of LINE FEED commands, and then executing an ESC - sequence. This is repeated for each desired tab stop. The location of the vertical tab stop is defined as follows:

$$\text{Vertical Tab Position} = \frac{\text{Vertical Position}}{\text{VMI}} + 1$$

Once vertical tab stops are set, subsequent VT commands will cause the paper to be indexed upward to the next sequential vertical tab stop. If there are no more stops set between the present print line and the end of the form, the paper will not move and the audible alarm (API-2 control panel only) will sound. Individual vertical tab stops cannot be cleared as can the horizontal tab stops. All tab stops, horizontal AND vertical, are cleared simultaneously by executing the ESC 2 sequence.

3.14 LINE FEED

A LINE FEED (LF) command thru the interface will cause the form to be moved up one line (one VMI). An ESC LF sequence acts as a negative line feed, causing the paper to be moved down one line. A line feed is also performed automatically as a result of a carriage return operation when AUTO LF is ON.

3.15 HALF-LINE FEED

A Half-Line Feed (ESC U) causes the paper to move up 1/2 line (1/2 of the VMI). A Negative Half-Line Feed (ESC D) moves the paper down 1/2 line. These two commands are unchanged in Graphics mode. If the VMI is set to some odd number, the total paper movement will be one increment (1/48 inch) less than 1/2 line.

3.16 FORM FEED

A FORM FEED command, issued either remotely or from the control panel, will cause the paper to be moved up to the first line of the next page, or to the top margin line if one has been set.

3.17 CARRIAGE RETURN

A CARRIAGE RETURN (CR) command thru the interface will cause the carriage to return to the left margin (Normal Printing Mode) or right margin (Reverse Printing Mode).

3.18 AUTO CARRIAGE RETURN

When the Auto Carriage Return mode is enabled, a carriage return occurs automatically when the carriage reaches print column 132. The automatic carriage return also causes a line feed, regardless of whether the Auto LF mode is enabled.

The means of activating Auto Carriage Return mode differs between the API-1.5 and API-2. In the API-1.5, Auto Carriage Return is enabled when there is no jumper installed in jumper position 3 on the LCPN control panel. When the jumper is installed, Auto Carriage Return is disabled. The Escape sequence ESC ?, which enables Auto Carriage Return in the API-2, is ignored by the API-1.5.

In the API-2, Auto Carriage Return mode is enabled only by receiving the sequence ESC ? thru the interface. The sequence ESC ! disables Auto Carriage Return in the API-2.

3.19 GRAPHICS

The API is placed into the Graphics mode by receiving an ESC 3 sequence thru the interface. A carriage return command or an ESC 4 sequence will return the unit to normal operation. While in the Graphics mode, carriage movement is completely divorced from printing; i.e., printing a character does not automatically move the carriage. The carriage can be moved only by executing a tab, space, backspace, or carriage return operation. The tab commands operate the same as they do in Normal mode. However, in Graphics mode the space and backspace commands move the carriage only 1/60" instead of the selected horizontal index amount. Vertical Tab and Form Feed operations are unchanged in Graphics, but Line Feed and Negative Line Feed cause only 1/48" of paper movement instead of the full line (VMI) movement they effect in Normal mode. Half-Line Feed (ESC U) and Negative Half-Line Feed (ESC D) act the same in Graphics mode as in Normal mode.

The Graphics mode provides a rudimentary means of charting, graphing and plotting with both the API-1.5 and API-2 terminals. The Graphics mode, however, relies entirely on the host system software for control; in contrast to the more sophisticated HyPlot Vector Plotting feature additionally available with the API-2. The HyPlot feature is described in subsection 3.25.

3.20 TWO-COLOR PRINTING (Available only on non-ECS units, as an option)

On units equipped with the two-color printing option, two-color printing can be achieved by installing a Diablo two-color ribbon cartridge. The mechanism initializes to print in the primary color (black). To print in the alternate color (red), excecute an ESC A sequence. To return to the primary color, execute an ESC B sequence. The ribbon position should not be changed at a rate exceeding 3 times per second.

Note: Factory adjustment optimizes performance using a 5/16" multi-strike ribbon. Subsequent adjustment may be necessary if 2-color ribbon is going to be used.

3.21 RESET/INITIALIZATION

3.21.1 Limited Reset

This operation is initiated by either:

- The RESET switch on the control panel.
- An ESC SUB R sequence through the interface.

The results of the Limited Reset operation are:

- Any existing error indications are reset.
- A Restore operation occurs if the printer is in a Check condition.

3.21.2 Initialize

The Initialize operation is initiated by any of the following actions:

- Application of power to the Model 630
- Execution of remote reset command (ESC CR P)
- Execution of command "Initialize Printer" (ESC SUB I)

(Subsection 3.23.1 points out the differences of execution between ESC CR P and ESC SUB I.)

The Initialize operation resets all the logic circuits, resets all program counters to zero, and sets the operating parameters of the unit as listed below. The unit will not respond to any input until the restore cycle is completed.

- Normal print mode
- Forward print mode
- Left-to-right forward print direction (Print Position 0 at leftmost carriage position)
- Carriage moved to Horizontal Position 0
- Vertical Position cleared to 0 (paper does not move)
- VMI set to 8 (6 lines/inch)
- Lines/page set to 66 (11" page) or 72 (12" page). 72 lines/page selected by jumper #1 on API-1.5 control panel only.
- Print in black
- Auto Backward (Bidirectional) Printing enabled
- Left margin set to position 0
- Right margin set to position 1572
- Top margin set to position 0 (line 1)
- Bottom margin set to position 528 for 11" page, or 576 for 12" page
- All horizontal and vertical tab stops cleared
- Send and print buffers cleared
- ECS defaults to primary character set
- Print wheel selection defined by print wheel type switches on control panel (Discontinues use of down-loaded print wheel parameters)

3.22 PRINT WHEEL TABLE DOWN-LOAD

3.22.1 General

Print Wheel Table Down-Loading allows the user to specify a complete ASCII-to-spoke conversion table for any print wheel desired. This temporary conversion table is "down-loaded" from the host computer to the read-write (RAM) memory of the API. The down-loaded table can then be used in place of the resident print wheel tables permanently stored in the read-only memory (ROM) of the API. For each ASCII code corresponding to a print character on the print wheel, the print wheel table specifies:

- hammer energy
- proportional space/ribbon advance units
- spoke position
- ribbon up/down, or print wheel up/down (ECS)
- whether a printable spoke position on this wheel

When an ASCII print character is received over the interface in the normal printing mode, the API's microprocessor refers to a particular location in the selected lookup table to obtain the proper print data for that character. Although every print wheel table used in the API contains 96 table entries (192 in ECS mode), for the 88-and 92-character print wheels some table positions will specify a nonprinting status, corresponding to the nonexistent spoke positions on those wheels.

> Note: This description of print wheel table down-loading applies to the API operating in standard print wheel mode, which accomodates a maximum of 96 print characters per print wheel. For the API operating in the ECS (Extended Character Set) print wheel mode, the procedure is the same but the print wheel table must then contain 192 table entries corresponding to the 192 print characters possible on the ECS print wheels.

The descriptions given here regarding down-loading prescribe the format and protocol necessary for down-loading a print wheel table to the API. However, host system design for assembling the table and implementing actual down-loading will vary with the system and with user preferences.

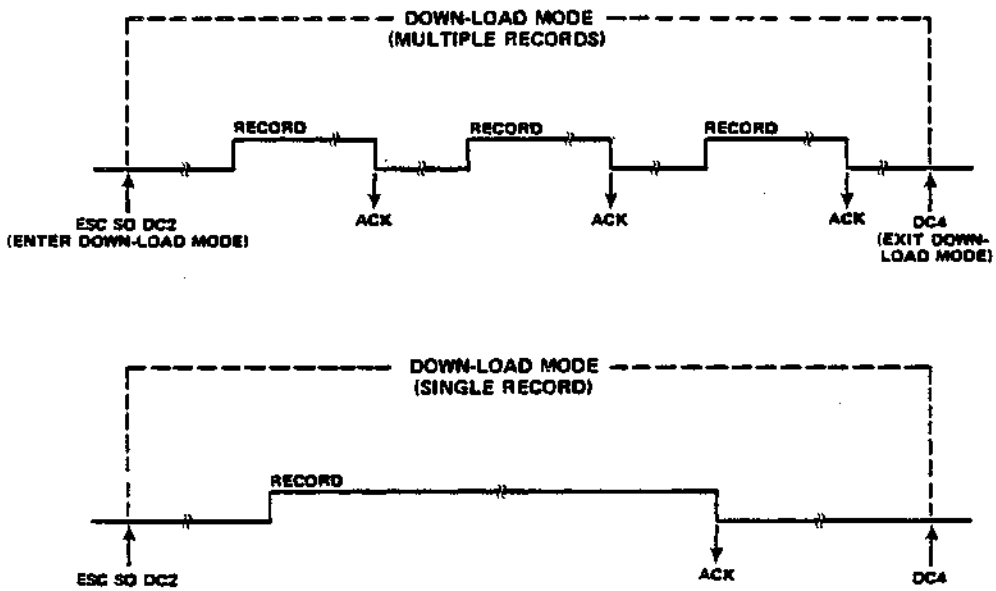

Note: The total amount of Table Data stored by either a Single-Record Down-Load or Multiple-Record Down-Load is 192 bytes for non-ECS table, or 384 bytes for ECS table (2 bytes for each possible character position on print wheel).

Figure 3-4. DOWN-LOAD VARIATIONS

The diagrams in Figure 3-4 represent two variations of the down-load procedure: down-loading the table by a single record, and down-loading by multiple records. The required record format is described in subsection 3.22.2 below. Subject to user

preference, the entire print wheel table can be down-loaded within a single record, or the table can be loaded in segments by a series of records. Smaller records are more easily debugged if errors in data format occur, but otherwise the multiple-record method has no significant advantage over single-record down-loading.

Print wheel down-load mode is entered with the sequence ESC SO DC2, and exited with the single control character DC4. Once the down-load procedure has been completed successfully, the down-loaded table is automatically selected for print wheel support. Reselection of one of the resident tables can be made by initializing the terminal (power off-on or remote reset), or by re-entering the down-load mode and sending an invalid record. (See subsection 3.22.2.2 to determine an appropriate invalid record.)

3.22.2 Down-Load Data Record Format

The table is down-loaded using a hexadecimal blocked record structure as depicted in Figure 3-5. This format is similar to other common down-load structures. A "record" consists of a record start character, a record type character, a byte count, a load address, the table data, and a checksum. Each of these elements is described in detail below, and illustrated in subsection 3.22.4 by the printout of an actual down-load structure.

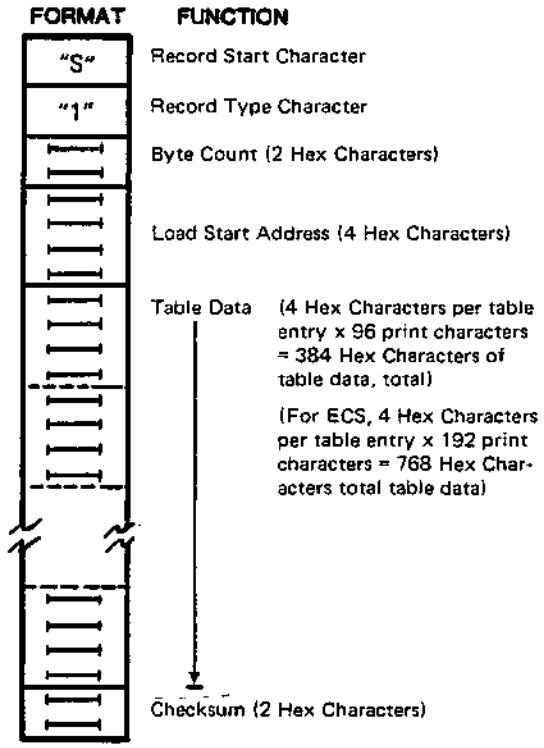

Notes:

1. ⊢—⊣ = One Hex Character
2. The "Hex" characters designated in this diagram are ASCII characters, from the host, representing Hexadecimal values 0-9 and A-F.

Figure 3-5. DOWN-LOAD RECORD FORMAT

If no error in data format is detected while receiving the record, the terminal will transmit an ACK character immediately following receipt of the end of the record. An error in data format is detected if the terminal receives any character other than the hex characters 0 thru 9 and A thru F, or if the checksum does not compare correctly against the data received. If an error in data format is detected, the terminal immediately transmits a NAK character, exits down-load mode, and defaults table selection to the resident print wheel table selected by the print wheel switch on the control panel.

Note: The "hex characters" referred to throughout this description are represented by standard 7-bit ASCII characters 0 - 9 and A - F from the host computer. These characters are translated internally by the API into standard 4-bit hexadecimal characters.

3.22.2.1 Record Start Character

The record start character is an ASCII "S". Any data encountered before the "S" will be ignored. This allows carriage returns and line feeds, or other characters, to be embedded before, after, or between data records. These embedded characters will not affect the down-load process, but do allow appropriate formatting of the printout if a hard-copy reference of the down-load records is printed out (see subsection 3.22.4).

3.22.2.2 Record Type Character

The record type character must be an ASCII "1". In other similar down-load structures, the record type character may also be a "0" ("header record") or a "9" ("end-of-file record"). In the API, a record identified as type 0 or 9 will simply be ignored. Any character other than a 0, 1 or 9 is detected as a down-load error, which causes the API to transmit a NAK and terminate the down-load mode. Print wheel table selection then defaults to the resident print wheel table selected on the control panel.

3.22.2.3 Byte Count

The byte count consists of two hex characters that specify the number of data bytes to follow, including the address and checksum. Because the byte count is based on a system of two 4-bit hex characters per byte, the record will contain twice as many hex characters as the number specified by the byte count.

3.22.2.4 Load Address

The load address consists of four hex characters that specify the starting location in memory where the table data in this record is to be loaded. The most significant hex character must be sent first. The diagram in Figure 3-6 illustrates the print wheel table memory layout.

The block of memory addresses allocated for the print wheel table extends from 0040 hex thru 00FF hex (non-ECS mode) or thru 01FF hex (ECS mode). If a Load Address outside this range is specified, it is interpreted as an error in data format and causes the API to abort the Down-Load mode. The data in each table entry occupies two byte locations of storage, and the data is loaded in <u>ascending order of hex value of the corresponding ASCII characters</u>.

The load address specified in the record must be equal to two times the hex value of the first ASCII character whose print data will be loaded in the table by this

record. For example, if this is the second record of a multiple-record down-load and the first table entry to be loaded by this record is for the ASCII character "B" (hex 42), the Load Address for this record is 0084 (hex). The two bytes of table data associated with printing the "B" will actually occupy locations 0084 and 0085, followed by the two bytes of data associated with the ASCII character "C" (hex 43) in memory locations 0086 and 0087, and so on for all subsequent characters in ASCII hex order. The Load Address for a single-record down-load, and for the first record of a multiple record down-load, is always 0040 hex; corresponding to two times the lowest hex code (20) that represents a printable character in the Model 630 API.

Note: In the API, the table data in memory locations 0040 and 0041 hex is the data accessed by an ESC Y sequence through the interface. Similarly, the table data in memory locations 00FE and 00FF hex is the print data for the character accessed by ESC Z.

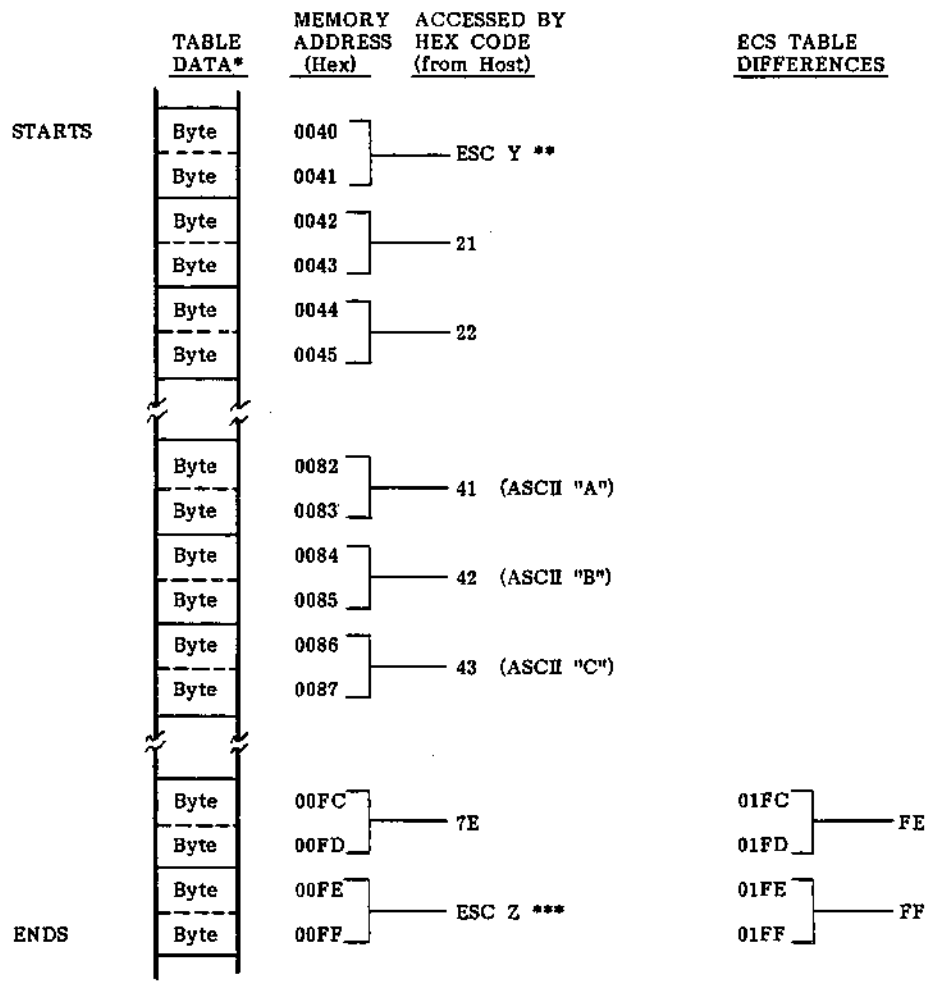

NOTES:

* Each table entry is stored in memory as four 4-bit hex characters, comprising two 8-bit bytes as depicted above.

** Table data for character under ASCII code 20 (hex) is accessed by ESC Y over the interface during normal print mode.

*** Table data for character under ASCII code 7F (hex) is accessed by ESC Z over the interface during normal print mode.

Figure 3-6. DOWN-LOAD TABLE MEMORY MAP

3.22.2.5 Table Data

Each print wheel table entry (four hex characters) occupies two bytes of memory space. The four hex characters comprising these two bytes in memory are recognized in the following order:

First hex character	- represents -	First byte, high 4 bits
Second hex character	-	First byte, low 4 bits
Third hex character	-	Second byte, high 4 bits
Fourth hex character	-	Second byte, low 4 bits

The format of the two bytes in memory is defined below.

	BIT							
	7	6	5	4	3	2	1	0
1st Byte -	P	H	H	H	ps	ps	ps	ps
2nd Byte -	R	S	S	S	S	S	S	S

Where: P = 1 if this is a printable position on this print wheel;
= 0* if this is a nonprinting position (such as with certain positions on 88- and 92-character print wheels).
H = hammer energy 1 to 4 (0 = no hammer fire).
ps = proportional space value 0 to 15 (also used for ribbon advance if in PS mode)

R = 1 if ribbon up at print time is desired (non-ECS); 0 if ribbon down desired. (Normally R=1 for all characters)
= 1 if outer row character, 0 if inner row character (ECS).
S = absolute electrical spoke position 0 thru 95. (Spoke position specified greater than 95 will select spoke 0 and inhibit hammer fire.)

* CAUTION: Failure to assign nonprinting status (P=0) when needed may result in print wheel damage by allowing the hammer to fire against the print wheel flag on 88- and 92-character print wheels.

Diablo publishes Print Wheel Data Books (Publication No. 90445-XX) which contain the print wheel data that must be inserted by the host system when assembling a down-load print wheel table. (See subsection 4.4 in this manual.)

All of the 96 locations in the table (192 for ECS) must be loaded. For any non-printing print wheel positions, the "P" bit shown in the table data format (the highest bit in the first byte) must be a "0". The states of all other bits associated with that position are then irrelevant except for the "ps" bits (low 4 bits of the first byte). If this nonprinting position should ever be addressed in normal printing mode, the API will default to a space mode, in which the value specified by the "ps" bits for this character determines the amount of carriage movement that occurs.

Any down-loaded table that will be used in a telecommunications environment must conform to the internationally accepted ASCII/ISO conventions regarding the specific hex code assigned to each ASCII character (see Fig. 4-1).

3.22.2.6 Checksum

The checksum consists of two hex characters produced by the host computer. It is the negation (i.e., the "1's" complement) of the modulo 256 sum of all data bytes, starting with the byte count. When all of the data bytes starting with the byte count are added together as received by the API, and the checksum is then added, the result must be FF hex. No end-around carry is used when the check is calculated.

If the check calculation results in a nonzero sum, it is detected as an error in data format, a NAK is transmitted by the API, and the down-load mode is aborted. In this situation, print wheel selection defaults to the control panel switch setting.

3.22.3 Down-Load Procedure

Described below is the general sequence of events that comprises a proper down-load procedure. The diagrams in Figure 3-4 will aid the reader in understanding the procedure described here.

1) At power-up, remote reset (ESC CR P), or initialize (ESC SUB I), the down-load table memory locations are initialized to all zeroes, and the resident default print wheel table is used, as selected by the PRINT WHEEL switch on the control panel.

2) The operator must set the PRINT WHEEL switch on the control panel according to the type of print wheel table that is going to be down-loaded. Although the down-loaded table will supply the print data for subsequent printing, the switch still controls the critical servo timing differences required between plastic and metalized print wheels.

3) The host sends the sequence ESC SO DC2 to put the API into the down-load mode.

4) The host sends the properly-formatted record(s) containing the table data. If this is being done as a single-record down-load, the entire table will be loaded by one record. If it is being done as a multiple-record down-load, subsequent records must be sent to load the remaining portions of the table data.

   - After each correctly-received record, the API sends an ACK character back to the host, and then awaits the "S" character at the start of the next record, or the DC4 character that terminates the down-load mode. Any other characters received during this waiting period are simply ignored by the API.

   - Any error in data format detected while a record is being received, or as a result of the checksum calculation, will cause the API to transmit a NAK character and immediately abort the down-load mode. In this situation, table selection reverts to the PRINT WHEEL switch on the control panel.

5) After the ACK from the last record has been received, the host sends a DC4 character to take the API out of the down-load mode. The Model 630 will now use the down-loaded print wheel data for all ASCII-to-spoke translation. Meanwhile, the PRINT WHEEL switch on the control panel continues to control the servo timing differences for plastic and metalized print wheels.

3.22.4 Sample Down-Load Structure

Figure 3-7 shows a printout of the group of records comprising an actual print wheel down-load structure. Following the printout, each element of the first record is separated and defined. As stated earlier, this printout serves only as a hard-copy reference of the assembled down-load elements - it does not actually occur as part of the down-load process.

In this example, seven separate records are used to down-load the table data for a Pica 10, 88-character Xerox metalized print wheel. The number and length of the records in this example has no general significance; it is simply the way the down-load was structured by this particular host system.

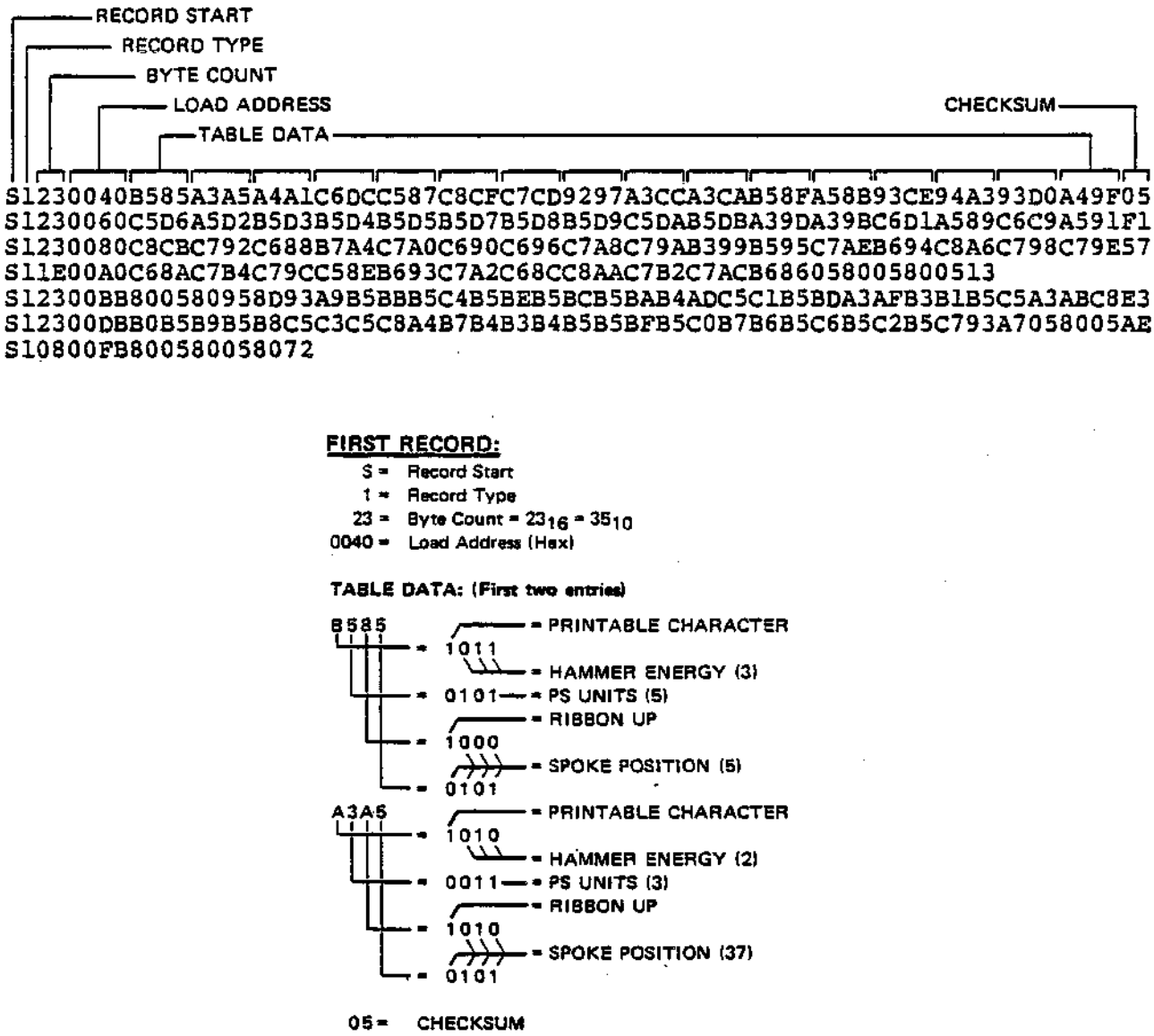

Figure 3-7. SAMPLE DOWN-LOAD STRUCTURE

3.23 REMOTE DIAGNOSTICS

The remote diagnostics feature allows the interrogation of machine parameters and status through the interface. The following diagnostic commands are included in this feature:

ESC SUB I	Initialize the printer
ESC SUB R	Remote error reset
ESC SUB SO	Memory Test
ESC SUB 1	Request status byte 1
* ESC SUB 3	Request status byte 3

* API-2 only

All diagnostic commands are processed immediately when received and are not queued. This means all status reported will be the status present at the time the command was received. Only the low 7 bits (bits 0 thru 6) of a status byte are significant. Their equivalent value may range from 0 to 127. The MSB (bit 7) will be a parity bit as defined by the PARITY ENABLE and PARITY EVEN/ODD switches. All commands that evoke a response from the Model 630 will result in a status byte being sent to the host computer preceded by an STX character. The STX identifies the following byte as a status byte. The rules for DC1/DC3, and Printer Ready protocols are applicable and should be used for sending status requests to the Model 630.

3.23.1 ESC SUB I

This command will cause the Model 630 to unconditionally execute an initialize sequence regardless of any error conditions that may exist within the printer. This command is executed immediately when received over the interface, unlike the corresponding remote reset sequence ESC CR P which is queued along with other commands. The Model 630 will default to the same conditions that exist at power-up. Before sending this command, the host should send a nonprinting character to cause the Model 630 to abort any multiple character sequence in progress.

3.23.2 ESC SUB R

This command causes the Model 630 to reset any error conditions. It produces essentially the same result as pressing the RESET switch on the control panel. If the unit is in check, it will execute a restore. Due to internal program latency, the minimum time necessary to reset all errors is 250 milliseconds.

In a situation where the terminal is being operated without a control panel, a series of up to eight automatic restores occurs if the terminal goes into a check condition. The ESC SUB R sequence causes the automatic restore counter to be reset to enable another series of automatic restore operations.

3.23.3 ESC SUB SO

This command will cause API to do memory test and send the result through the interface. The true-state bit definitions in the result byte are:

0	ROM 1 bad	4	(not used)
1	ROM 2 bad	5	(not used)
2	Internal RAM bad	6	(not used)
3	External RAM bad	7	Parity bit

3.23.4 ESC SUB 1

This command will cause the Model 630 to send a status report byte (STATUS 1) thru the interface. The true-state bit definitions for this byte are:

Bit	Status
0	End of ribbon
1	10 pitch (This bit false if any other pitch is selected)
2	Paper out
3	Auto line feed enabled
4	Cover open
5	Printer idle (no motion, and print queue empty)
6	Printer in Check
7	Parity bit *

* The state of bit 7 is defined by the two parity control switches on the control panel.

3.23.5 ESC SUB 3 (API-2 only)

This command causes the Model 630 to send a status report byte (STATUS 3) thru the interface. This status byte pertains to a sheet feeder being used on the Model 630. The true-state bit definitions for this byte are:

Bit	Status
0	Insert not completed - denotes paper jam or out of paper
1	Exit not completed - denotes jam of paper during exit
2	Feeder present - Model F33 (dual tray plus envelopes) - see Table 3-4.
3	Feeder present - Model F32 (dual tray) or F33 - see Table 3-4.
4	(Not used)
5	Feeder present - Model F31 (single tray) - see Table 3-4.
6	Feeder in manual mode
7	Parity bit

* The state of bit 7 is defined by the two parity control switches on the control panel.

Table 3-4
FEEDER IDENTIFICATION

Bit 2	Bit 3	Bit 5	Feeder Installed
0	0	0	None
0	0	1	F31
0	1	0	F32
1	1	0	F33

3.24 WORD PROCESSING FEATURES

The Word Processing (WP) features consist of several features that facilitate word processing applications of the API. Most of the WP functions are performed on a character by character basis. Those which require memory storage while being performed are: (1) Auto Line Center (2) Auto Justify. The WP features are compatible

with all normal terminal operations except Graphics mode. All WP features are disabled during Graphics mode.

3.24.1 Proportional Space Printing

(See subsection 3.9.3)

3.24.2 Offset Selection

The normal way to change character spacing is to adjust HMI. However, for proportional space printing, HMI is ignored and table values are used. Thus, to add or subtract a constant to each table size, the 3-character sequence ESC DC1 ("character") should be used. The binary value of the "character" is added to each table size value, or HMI if it is controlling size, as well as to the space character. This continues until another ESC DC1 (character) sequence is received, or until offset is cleared by a carriage return (CR) or the sequence ESC X.

The seven bits of the "character" are defined as follows:

Bits 1-6 = Size of offset (63 units maximum - 1/120" per unit)
Bit 7 = Sign of offset (1 = negative)

If a negative offset (smaller character size) is desired, bit 7 should be set. If the resulting character size is zero or less, no carriage movement will occur. Note that because NUL and DEL cannot pass thru the serial receiver, positive offset values range from 1 thru 63 (0 000001 thru 0 111111), and negative values range from 0 thru 63 (1 000000 thru 1 111111). The negative 63 can be obtained only by sending the sequence ESC Z thru the interface in place of DEL (1111111) since the DEL code will not pass thru the serial receiver. Refer to Figure 4-1 in Section 4 of this manual for a Code Chart showing the ASCII characters corresponding to these values.

3.24.3 Auto Underscore

Automatic underscoring is initiated by the sequence ESC E. The present carriage position is stored in memory as the start location. When the end position is reached, the carriage will underscore the area between the start location and the end position. The printed underscore characters will overlap and the ribbon advance will increase to prevent fading.

The end position is defined as the carriage position when one of the following events occurs.

ESC R - The underscoring occurs, the carriage stops at the first position after the underscore, and the Model 630 exits the Auto Underscore mode.
CR - The underscoring occurs, and the carriage returns to the left margin.
LF - The underscoring occurs, the carriage stops at the first position following the underscore, and a line feed occurs.

Auto Underscore is cancelled by either sequence ESC R or ESC X. No underscoring will occur if the sequence ESC X is received, or if the area between the start and end locations is not positive.

3.24.4 Bold Overprint

Bold overprint is initiated by the sequence ESC O. Subsequent printable characters are struck twice with no intervening carriage motion. The normal ribbon advance occurs between character strikes. A carriage return (CR) or either of the sequences ESC & or ESC X will cause the Model 630 to exit the bold overprint mode.

NOTE: Bold Overprint and Shadow Print are mutually exclusive modes.

3.24.5 Shadow Print

Shadow print is initiated by the sequence ESC W. Subsequent printable characters are struck twice with 1/120" of carriage movement and normal ribbon advance between character strikes. This does not change the HMI or table size value for that character. Increased carriage settling time may improve shadow print quality on some units. A carriage return (CR) or either of the sequences ESC & or ESC X will cause the Model 630 to exit the shadow print mode.

3.24.6 Carriage Settling Time Control

The carriage settling time can be increased to 20 msec by issuing the sequence ESC %. This provides more time for mechanical vibrations to damp out before printing. Thus it produces improved print quality, at a small sacrifice in print speed. The sequence ESC N will restore the normal carriage settling time.

3.24.7 Half-Unit Backspace

The sequence ESC BS will produce a 1/120" backspace movement of the carriage.

3.24.8 Program Mode

Program mode enables user control of spoke position, hammer energy, and ribbon advance. This allows the use of special print wheels without modifications to the Model 630. In Program Mode, two characters are sent for each character to be printed. The first character selects the print wheel spoke; the second establishes the hammer energy and ribbon advance. (NOTE: To use Program Mode when operating in ECS mode, the system must be operating with 8-bit ASCII, wherein the 8-bit of the first character specifies inner or outer row character: 8-bit = 1 = Inner row selected.)

See Table 4-7 in Section 4 for Hammer Energy and Ribbon Advance units. Also, the Diablo Print Wheel Data Books, will prove very useful for operating the Model 630 in Program Mode. (See subsection 4.4 of this manual.)

Fixed-pitch spacing is controlled by HMI plus offset. If the Model 630 is in proportional space mode, spacing is controlled by the ribbon advance units (move RA, print, move RA) for each character plus offset.

Program mode is initiated by the sequence ESC SO M. It is turned off by either the control character SI or the sequence ESC X.

3.24.8.1 Spoke Position Data (first character)

The first character received is tested to determine if it is a control character or a spoke position character. If it is a control character, the normal processing of control characters will occur. If it is not a control character, it is assumed to be

a spoke position character. The next character then will not be tested for control character parameters. The proper value to be sent for the first character is selected by applying the following formula according to the example given below:

Formula:

First Character = Binary equivalent of the decimal sum of:
(Electrical Spoke Position Number + 32)

Example: (Addressing character "A" on 96-character metalized print wheel)

1) Refer to Figure 4-5 in this manual to determine the spoke position number of the desired character (A). In this case, the spoke position number is 18.

2) Apply formula given above: 18 + 32 = 50

3) Refer to Table 4-1 in this manual to determine the ASCII character that has a binary equivalent of decimal 50. The table shows that character to be a "2". The ASCII "2" then is the proper first character to send for addressing an "A" when operating in Program Mode with a Diablo 96-character metalized print wheel.

Note that only spokes 1 thru 94 can be distinguished from control characters. However, spokes 0 and 95 can be accessed by ESC Y and ESC Z respectively, followed by the second character.

If print wheels with less than 96 spokes are installed, ensure that the 88-92-96 print wheel selection switch is properly set (API-2 control panel).

3.24.8.2 Hammer Energy/Ribbon Advance Data (second character)

The second character in the sequence is the hammer energy/ribbon advance character. This character contains 4 bits (0 - 3) for ribbon advance and 3 bits (4 - 6) for hammer energy. This provides 16 different size ribbon advances (0 to 15 steps) and 5 different hammer energy levels (0 to 4). The hammer energy level definitions are as follows:

Level 0 - Do not fire hammer
Level 1 - Lowest hammer energy
Level 2 - Low hammer energy
Level 3 - Medium hammer energy
Level 4 - High hammer energy
Caution - Level 4 should be used only after it has been determined that the lower energy levels are inadequate for printing a particular character.

The Hammer Energy/Ribbon Advance character provides a means for the user to tailor print quality and ribbon economy as desired. The general criteria for selecting the proper amount of hammer energy and ribbon advance is to use the lowest hammer energy and the minimum ribbon advance that will produce a level of print quality suitable for the intended application. Excessive hammer energy levels will unnecessarily shorten the useful life of the affected print wheels.

The Print Wheel Data Books mentioned earlier are valuable aids for determining proper hammer energies and ribbon advance units for any of the Diablo or Xerox print wheels suitable for use on the Model 630. The Data Books list the recommended hammer energy for each print character on each of the different print wheels. For the metalized print wheels, the Data Book also lists a recommended proportional space (PS) unit for each character on the print wheel. In general, the recommended PS unit value for a particular character is also the appropriate ribbon advance unit value to use after printing that character. For the plastic print wheels, which are not assigned PS unit values, a standard ribbon advance unit value of 6 will prove satisfactory in most cases.

3.24.9 Auto Center

Auto line centering is initiated by the sequence ESC =. Subsequent data is stored in a memory buffer until a carriage return (CR) or a line feed (LF) command is received. The data is then printed centered between the margins, and the Model 630 exits the auto center mode. Auto Center allows the line to extend beyond the left and right margins. If Auto Justify was enabled when Auto Center was entered, Auto Center will have precedence for that line only. The sequence ESC X will clear Auto Center without performing any printing. ESC X is not intended as a line terminator, and should not be embedded in a line of text to be auto centered.

3.24.10 Auto Justify

Automatic margin justification is initiated by the sequence ESC M. The ESC M should precede the first printable character in a line. Subsequent data is stored in a memory buffer until a carriage return (CR) or a line feed (LF) command is received. The data is then printed justified between the left and right margins. Auto Justify remains enabled until the sequence ESC X is received, or until a break is transmitted or received. The Model 630 then exits the mode.

Auto Justify operates in fixed pitch or proportional space mode. Up to 256 data characters may be included in a line. Note that all communication protocols still function normally.

Auto Justify begins its justification calculations from the position of the first printable character after the carriage return (CR), line feed (LF), Horizontal Tab (HT), or ESC M sequence. This allows unjustified leading spaces or tabs and allows partial line justification. Auto Justify calculates the number of 1/120" offset units needed to fill out or to condense the line so that it will fit exactly between the first printable character and the right margin. The offset units are then applied, first to the word spaces, and then to the character and word spaces after the word spaces reach 150% of their normal size. If the offset added to the character spaces exceeds 7 units, the line is printed unjustified.

The following conditions are imposed on the use of ESC sequences while in the Auto Justify mode:

- Any graphics-related ESC sequences are <u>not</u> permitted. (WP features are not functional in graphics.)
- The following ESC sequences are permitted to be used within a line of text while in Auto Justify mode:

ESC U, ESC D	Half Line Feed, Negative Half Line Feed (Exception: Half Line feeds are not permitted across a page boundary.)

ESC HT (n), ESC US (n)	Horizontal Tabs, HMI
ESC Y, ESC Z	Printable ASCII characters
ESC A, ESC B	Print red ribbon, print black ribbon
ESC E, ESC R	Auto Underscore ON, OFF
ESC W, ESC &	Shadow Print ON, OFF (CR clears)
ESC O, ESC &	Bold Print ON, OFF (CR clears)
ESC %, ESC N	Increased carriage settling time ON, OFF
ESC BS	Backspace 1/120"

- All other ESC sequences are permitted only at the beginning of a line of text (before the first printable character).

3.24.11 Cancel Word Processing Features

The sequence ESC X will cancel the following features:

Auto Underscore	Bold Overprint
Shadow Print	Program Mode
Offset Selection	Auto Justify
Auto Center	

Increased carriage settling time and proportional space mode are not cancelled by ESC X.

(THIS SPACE INTENTIONALLY BLANK)

3.25 HYPLOT VECTOR PLOTTING (API-2 only)

3.25.1 Scope

The HyPLOT firmware option enables the Model 630 Terminal to recognize and execute the ESC and Plot command sequences unique to Diablo HyPLOT Vector Plotting. This subsection describes the operation of HyPLOT, and outlines the command sequences which must be supplied by the operator either thru a keyboard or from a host system to produce graphs or vectors.

3.25.2 Definition Of Terms

Default - A "built-in" instruction or value for use by the unit in the absence of a user input on the subject.

h - The number of increments of horizontal (X) movement (at 1/120" each) between print points along the vector line. Minimum value allowed is 0, maximum is 31. See Table 3-5.

Plot Point - The basic X-Y coordinate location identified in the HyPLOT command sequence. Each successive plot point establishes the magnitude and direction for the intervening vector.

Print Point - The individual points along a vector where the plot character is printed. Spacing between individual points, called the precision or resolution of the vector, is determined by the values selected for h and v. Note that the actual print point will be located at the nearest whole increment coincident value of both h and v, and not always exactly on the actual or intended "straight line" of the vector.

Print Position - The position on the paper form directly in front of the print hammer where the next character may be printed.

v - The number of increments of vertical (Y) movement (at 1/48" each) between print points along the vector line. Minimum value = 0, maximum = 31. See Table 3-5.

Vector - A quantity having both magnitude and direction commonly represented by a directed line segment. In HyPLOT the line segment between successive plot points.

X - Print position (carriage) movement in the horizontal direction (X coordinate), where

+X = Relative movement to the RIGHT (cumulative total cannot exceed the physical limits of the printer - 1572 increments

-X = Relative movement to the LEFT (remainder cannot be less than 0 or beyond the physical limits of the printer)

Absolute moves do not require a sign. The increment count, which is the horizontal print position address, simply increases to the RIGHT and decreases to the LEFT.

Minimum possible increment of horizontal movement = 1/120".

Y - Print line (paper) movement in the vertical direction (Y coordinate), where

+Y = Relative movement DOWN (paper moves UP for positive line feed - cannot exceed the limits set for either lower margin or 548 increments, will cause a Form Feed)

-Y = Relative movement UP (paper moves DOWN for negative line feed - cannot exceed the TOF or top margin, paper movement will stop)

Absolute moves do not require a sign. The increment count, which is the print line address, simply increases DOWN (paper UP) and decreases UP (paper DOWN).

Minimum possible increment of vertical movement = 1/48".

3.25.3 Description Of HyPLOT Vector Plotting

HyPLOT action begins with the unit receiving a special pattern of ESC codes to enter HyPLOT mode and establish plot parameters. Once in the HyPLOT mode, the unit's print position can be moved to any (X-Y) plot point coordinate within the current page boundaries as defined by the unit's Printing Format instructions. Each such plot point requires a command sequence of not more than 6 bytes. The actual move from one plot point to the next is accomplished in one of two ways; either directly with no plot character printing along the vector, or by a series of carriage and paper feed moves equal to the values of h (horizontal or X plot precision) and v (vertical or Y plot precision) defined in the HyPLOT Mode command sequence and printing the selected plot character at those print points where whole values of h and v occur near the actual "straight line vector" between the plot points. In short, the unit "fills in" the vector line between plot points by printing the plot character at each point along the line spaced according to the values of h and v.

HyPLOT offers two methods of plotting - ABSOLUTE and RELATIVE, with the only difference being the manner in which each plot point is addressed. In the ABSOLUTE Mode, each plot point is addressed in terms of its X/Y location relative to the page ORIGIN (X=0/Y=0). In the RELATIVE Mode, each plot point is addressed in terms of its X/Y displacement from the X/Y location of the preceeding plot point.

X-axis (carriage) movement consists of up to a maximum of 1572 total increments of 1/120" each (for 132 column paper) counting to the RIGHT from the ORIGIN. Y-axis (paper feed) movement consists of up to 528 increments of 1/48" each (for 11" long paper) counting DOWN from the ORIGIN. Note that the Y-axis increment count increases in value with the apparent downward movement of the print line, and that X-axis increment count increases in value as the carriage is moved rightward from the origin. Visualizing the vector plotting situation as it is normally perceived with X-Y coordinates, and remembering that all printer plotting is referenced from the origin (the top left corner of the printing format), then vector plotting is always done in the -Y/+X Quadrant, and therefore ALL Y values must be inverted. Note also that all vector plotting must be done within the confines of the four page margins (if any) defined by the unit's current Printing Format instructions, and that the unit assumes the 0/0 page origin print position upon entering HyPLOT Mode, with both X and Y position counters at 0.

3.25.4 The HyPLOT Commands

ESC	G	Enter HyPLOT ABSOLUTE Mode. All vector plot points are interpreted as absolute locations. Movement commands do not require the sign byte. Draw all vectors except the first, which is a move only.
ESC	G BEL	Same as ESC G except draw all vectors including the first one.
ESC	V	Enter HyPLOT RELATIVE Mode. All vector plot points are interpreted as relative locations. All movement commands must include a sign byte. Draw all vectors except the first, which is a move only.
ESC	V BEL	Same as ESC V except draw all vectors including the first one.
ESC	. (character)	Change the vector print character to the selected (character). The default character is the " . ".
ESC	, h v	h = horizontal print point resolution or "precision" in increments of 1/120", with a default value of 2. v = vertical print point resolution or "precision" in increments of 1/48", with a default value of 1. Both h and v can be assigned values between 0 and 31 (See Table 3-5). If both h and v = 0 then only the plot points will be drawn (or printed).
ESC	A	Ribbon down to print in red (requires 2-color ribbon option).
ESC	B	Ribbon up to print in black.
ESC	4 (or CR)	Exit HyPLOT mode.

Table 3-5
ASCII CHARACTERS FOR VALUES OF h AND v

Value	ASCII	Value	ASCII
0	Space	16	0
1	!	17	1
2	"	18	2
3	#	19	3
4	$	20	4
5	%	21	5
6	&	22	6
7	'	23	7
8	(	24	8
9	)	25	9
10	*	26	:
11	+	27	;
12	,	28	<
13	-	29	=
14	.	30	>
15	/	31	?

Table 3-6
CONVERSION - X/Y PLOT INCREMENTS OF MOVE TO BINARY EQUIVALENTS

Bit # → / Binary Value	12 / 2048	11 / 1024	10 / 512	9 / 256	8 / 128	7 / 64	6 / 32	5 / 16	4 / 8	3 / 4	2 / 2	1 / 1	PLOT POINT VALUE ↓
X													=
Y													=
	MSB					IB					LSB		

Table 3-7
CONVERSION - X/Y PLOT BINARY EQUIVALENTS TO ASCII BYTE CODE

BYTE	BITS 7	6	5	4	3	2	1	ASCII
1. SIGN	0	1	x	x	x	y	x	
2. HIY	0	1	5 MSBs of Y					
3. XLOY	1	1	0	2 LSBs of Y		2 LSBs of X		
4. LOY	1	1	5 Intermediate bits of Y					
5. HIX	0	1	5 MSBs of X					
6. LOX	1	0	5 Intermediate bits of X					

Sign Byte : x = doesn't care and Neg sign = 1/Pos sign = 0

Table 3-8
ASCII/BINARY CODE CHART

Bits b_7 →	0	0	0	0	1	1	1	1
b_6 →	0	0	1	1	0	0	1	1
b_5 →	0	1	0	1	0	1	0	1
b_4 b_3 b_2 b_1 ↓ ↓ ↓ ↓ / COLUMN → / ROW ↓	0	1	2	3	4	5	6	7
0 0 0 0	0	NUL	DLE	SP	0	@	P	`	p
0 0 0 1	1	SOH	DC1	!	1	A	Q	a	q
0 0 1 0	2	STX	DC2	"	2	B	R	b	r
0 0 1 1	3	ETX	DC3	#	3	C	S	c	s
0 1 0 0	4	EOT	DC4	$	4	D	T	d	t
0 1 0 1	5	ENQ	NAK	%	5	E	U	e	u
0 1 1 0	6	ACK	SYN	&	6	F	V	f	v
0 1 1 1	7	BEL	ETB	'	7	G	W	g	w
1 0 0 0	8	BS	CAN	(	8	H	X	h	x
1 0 0 1	9	HT	EM	)	9	I	Y	i	y
1 0 1 0	10	LF	SUB	*	:	J	Z	j	z
1 0 1 1	11	VT	ESC	+	;	K	[	k	{
1 1 0 0	12	FF	FS	,	<	L	\	l	¦
1 1 0 1	13	CR	GS	-	=	M	]	m	}
1 1 1 0	14	SO	RS	.	>	N	^	n	~
1 1 1 1	15	SI	US	/	?	O	_	o	DEL

3.25.5 Basic HyPLOT Procedure

Following are the step by step procedures used to create the composite ABSOLUTE/-RELATIVE Vector Plot Example shown in Figure 3-8. The reader is encouraged to use the forms shown as Tables 3-6, 3-7 and 3-8 as aids in gaining expertise in HyPLOT application. The HyPLOT Worksheet at the end of this subsection includes blank copies of Tables 3-6 and 3-7. The blank worksheet can be copied and used as an aid when formulating the command sequences required to produce a desired plot, as demonstrated in HyPLOT Example A and HyPLOT Example B.

The graph scale shown in Figure 3-8 is 35 character spaces wide x 12/120" increments per character (10 pitch) = 420/120" increments. It is 18 line spaces high x 8/48" increments per line space (6 lines per inch) = 144/48" increments. The graph scale is located on the page so that the 0/0 scale point ("A") is located at 21 x 12 = 252 increments horizontally (X) and 15 x 8 = 120 increments vertically (+Y) FROM the "x" in the top left corner which defines the 0/0 point or origin on the page. The printer assumes the "x" or 0/0 ORIGIN position upon entering the HyPLOT Mode, and the first vector plotting move must always be in a +Y or DOWNWARD direction and a +X direction RIGHT away from the origin. The printer will not execute negative going commands from the 0/0 page starting position.

(1.0) FIRST PLOT - ABSOLUTE MODE

(1.1) Initiate HyPLOT in ABSOLUTE MODE: ESC G
(The first plot is a MOVE ONLY from 0/0 ORIGIN to 0/0 SCALE ("A"))
Set Plot Character to lower case a: ESC . a
Set Plot Precision to 4 x default or 8h and 4v: ESC , ($
(Refer to Table 3-5 for ASCII characters)
Set Print in Black: ESC B

The resultant command sequence becomes ESC G ESC . a ESC , ($ ESC B

(1.2) Send plot command for MOVE ONLY vector to plot point "A"
The required move is 252 increments +X and 120 increments +Y.
This is an ABSOLUTE HyPLOT Vector, therefore the sign byte is not required and the increment count FROM the ORIGIN is the plot point address. The use of the forms in Tables 3-6, 3-7 and 3-8 illustrates the development of the command sequence for plot point "A", which becomes the 5 byte sequence SP ` ~ ! _ (See HyPLOT Example A).

Upon receipt of the last command character (#6 in the required sequence - #1 being ignored) the printer will execute the command and move its print position to vector plot point "A".

(1.3) Following this same procedure, vector commands are developed and sent for plot points "B", "C", "D" and "E". Following the initial no-print MOVE ONLY vector, the printer will print the selected plot character "a" along the vector between the several remaining plot points spaced according to the h and v values selected.

Send commands for vector to plot point 5/5, or "B" (Use HyPLOT Worksheet)
SP ` t "]

Send commands for vector to plot point 7.5/10, or "C" (Use HyPLOT Worksheet)
SP ` j # L

x

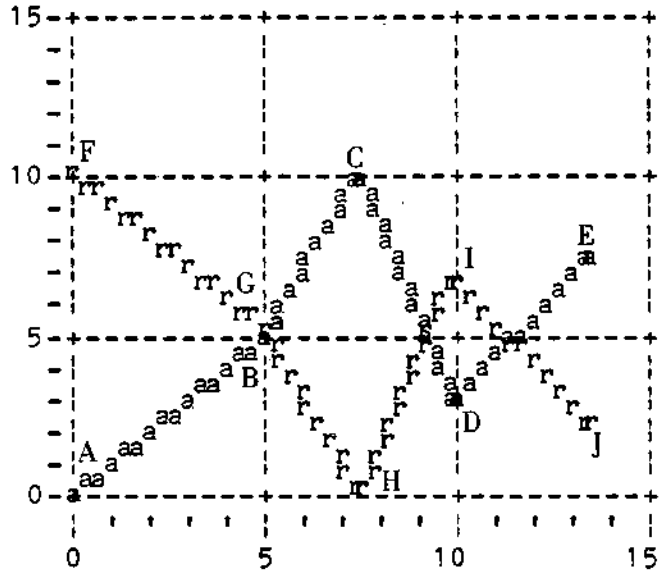

Figure 3-8. ABSOLUTE/RELATIVE VECTOR PLOT EXAMPLE

Send commands for vector to plot point 10/3, or "D" (Use HyPLOT Worksheet)
SP ^ x # [

Send commands for vector to plot point 13.5/7.5, or "E" (Use HyPLOT Worksheet)
SP ^ o $ P

It should be noted that in the ABSOLUTE mode, if bytes 2, 3, 4 or 5 do not change from one plot point to the next they need not be sent. Only the changed bytes AND byte 6 need be sent.

(1.4) Exit HyPLOT Mode with a carriage return (CR). ESC 4 also works, but a CR exits HyPLOT and also moves the carriage to the left margin.

(1.5) Send 7 negative line feed commands (ESC LF) and 1 negative ½ line feed (ESC D) to return the printer's print position to the 0/0 page ORIGIN position.

(2.0) SECOND PLOT - RELATIVE MODE

(2.1) Initiate HyPLOT in RELATIVE Mode: ESC V
(The first plot is a MOVE ONLY from 0/0 ORIGIN to 0/10 SCALE ("F"))
Set Plot Character to lower case r: ESC . r
Set Plot Precision to 4 x default or 8h and 4v: ESC , ($
(Refer to Table 3-5 for ASCII Characters)
Set to print in black: ESC B

The resultant command sequence becomes ESC V ESC . r ESC , ($ ESC B

(2.2) Send plot command for MOVE ONLY vector to plot point "F".
The required move is 252 increments of +X and 40 increments of +Y.
This is a RELATIVE HyPLOT Vector Plot, and ALL 6 BYTES must be sent for each plot point - including the sign byte. Again, the use of the forms in Tables 3-6, 3-7 and 3-8 illustrates the development of the command sequence for plot point "F", which becomes the 6 byte sequence SP j ! (See HyPLOT Example B).

Upon receipt of the last command (#6 in the required sequence) the printer will execute the command and move its print position to plot point "F".

(2.3) Following this same procedure, vector commands are developed and sent for plot points "G", "H", "I" and "J". Note that these are RELATIVE moves, and each command includes ONLY the increments of + or -X and + or -Y needed to move to the next plot point. Following the initial no-print MOVE ONLY vector, the printer will print the selected plot character "r" along the vectors between the several remaining plot points spaced according to the h and v values selected.

Send commands for vector to plot point 5/5, or "G" (Use HyPLOT Worksheet)
SP SP ` j SP ^

Send commands for vector to plot point 7.5/0, or "H" (Use HyPLOT Worksheet)
SP SP ` j SP O

Send commands for vector to plot point 10/7, or "I" (Use HyPLOT Worksheet)
" SP ` m SP O

Send commands for vector to plot point 13.5/2.5, or "J" (Use HyPLOT Worksheet)
SP SP ` i SP U

(2.4) Exit HyPLOT Mode with a carriage return (CR). ESC 4 works, but leaves the carriage in last plot point position. This would require backspaces as well as line feeds to move the print position to the next print line for any follow-on text.

Upon exiting HyPLOT Mode, the printer will "remember" its current print line relative to the T-O-F.

3.25.6 Summary

HyPLOT LIMITS:
Attempts to plot beyond a format margin or mechanical printer limit are not allowed for the following reasons.

+X beyond the right margin - the alarm sounds. Carriage movement and printing can continue.
+X beyond 1572 increments - the carriage stops at the mechanical limit. Paper feed and printing can continue.
-X beyond the origin - carriage stops at the left limit. Paper feed and printing can continue.
+Y beyond the lower margin or page end - printer automatically executes a FF to the top margin or TOF for the next page or form.
-Y beyond the origin - ABSOLUTE - the printer does not recognize the sign byte and cannot be commanded to move negatively (up) beyond 0.
-Y beyond the origin - RELATIVE - paper feed down stops at origin or TOF or top margin. Carriage movement and printing continue.

HyPLOT CHARACTER VARIATIONS:
The calculated plot point is always located in the center of the printer's character print space. Use of a "+" or "X" or similar character as the plot character will place the symbol's cross point at the calculated plot point. Use of a "." or a "," or other similar character places the center of the symbol somewhat below the calculated plot point. No set value can be given for this offset since it will vary between type styles and pitch settings. The user will be required to determine this value for the print wheel to be used and include it in when calculating the Y values for plot points.

DATA EXCHANGE FORMAT:

The X and Y values for each plot point must be reduced to corresponding incremental values by the host system. The host system must then operate on these values to render them in the required six byte series of HyPLOT commands acceptable to the HyPLOT-equipped Model 630 (See Tables 3-6 and 3-7). The Model 630 accepts HyPLOT data input in the form of the binary equivalent of ASCII characters making up 7-bit data bytes. The byte sequence given must be followed in either mode, except that in the ABSOLUTE Mode the sign byte is not sent and only those bytes which change from plot point to plot point need be sent - but EACH sequence MUST include the LOX or last (or 6th) byte whether it has changed or not. The printer reads the 6th byte as the execute command for the plot point being transmitted.

THE FULL ASCII COMMAND SEQUENCE FOR THE TWO PLOTS GIVEN:

ESC G ESC . a ESC , ($ ESC B	=	Set ABSOLUTE HyPLOT Mode & parameters
SP ` ~ ! _	=	Command Plot Point A X=252/Y=120
SP ` t "]	=	Command Plot Point B X=372/Y=80
SP ` j # L	=	Command Plot Point C X=432/Y=40
SP ` x # [	=	Command Plot Point D X=492/Y=96
SP ` o $ P	=	Command Plot Point E X=576/Y=60
ESC CTRL LF 7 times then ESC D	=	Command Sequence to return Print Position to origin
ESC V ESC . r ESC , ($ ESC B	=	Set RELATIVE HyPLOT Mode & parameters
< SP ` j ! _	=	Command Plot Point F X=252/Y=+40
SP SP ` j SP ^	=	Command Plot Point G X=120/Y=+40
SP SP ` j SP O	=	Command Plot Point H X=60/Y=+40
" SP ` m SP O	=	Command Plot Point I X=60/Y=-56
SP SP ` i SP U	=	Command Plot Point J X=84/Y=+36
CR	=	Exit HyPLOT Mode

HyPLOT EXAMPLE A

x

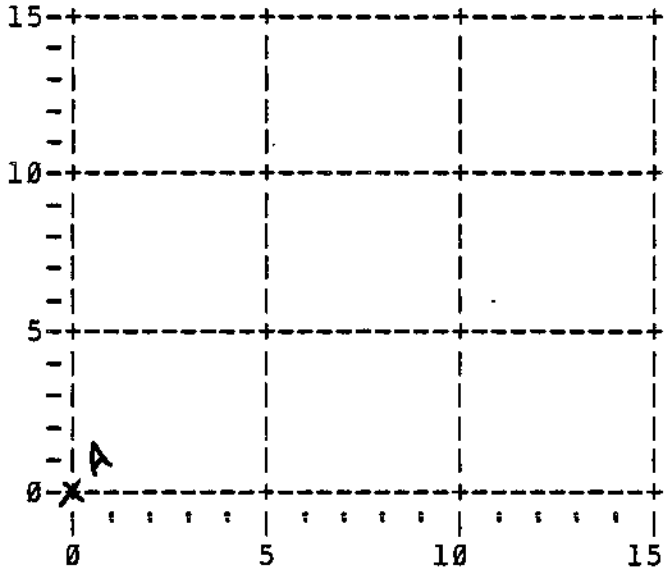

PLOT POINT A

X = 252

Y = 120

ABSOLUTE

TABLE 3-6A
CONVERSION - X/Y PLOT INCREMENTS OF MOVE-TO-BINARY EQUIVALENTS

Bit # → / Binary Value	12 / 2048	11 / 1024	10 / 512	9 / 256	8 / 128	7 / 64	6 / 32	5 / 16	4 / 8	3 / 4	2 / 2	1 / 1	PLOT POINT VALUE ↓
X	0	0	0	0	1	1	1	1	1	1	0	0	= 252
Y	0	0	0	0	0	1	1	1	1	0	0	0	= 120
	MSB					IB					LSB		

TABLE 3-7A
BINARY TO ASCII

BYTE	BITS 7	6	5	4	3	2	1	ASCII
1. SIGN	0	1	x	x	x	y	x	—
2. HIY	0	1	0	0	0	0	0	SP
3. XLOY	1	1	0	0	0	0	0	\
4. LOY	1	1	1	1	1	1	0	~
5. HIX	0	1	0	0	0	0	1	!
6. LOX	1	0	1	1	1	1	1	_

X = DON'T CARE

COMMAND: SP \ ~ ! _

HyPLOT EXAMPLE B

x

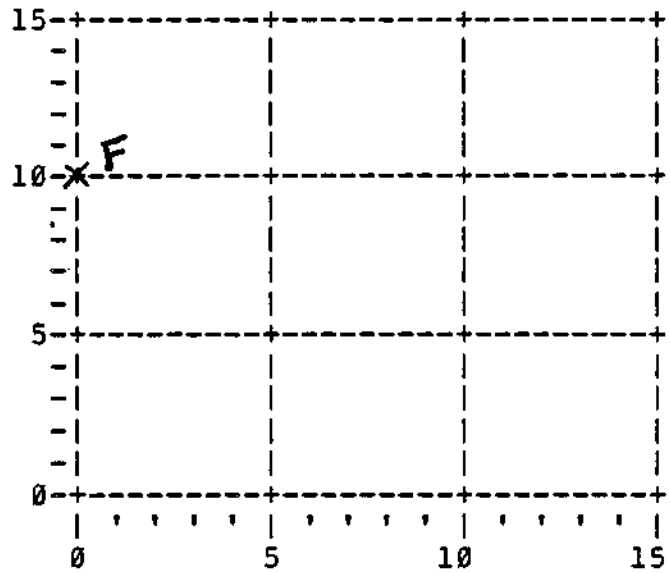

PLOT POINT F

X = 252

Y = 40

RELATIVE

TABLE 3-6B
CONVERSION - X/Y PLOT INCREMENTS OF MOVE-TO-BINARY EQUIVALENTS

Bit # → / Binary Value	12 / 2048	11 / 1024	10 / 512	9 / 256	8 / 128	7 / 64	6 / 32	5 / 16	4 / 8	3 / 4	2 / 2	1 / 1	PLOT POINT VALUE ↓
X	0	0	0	0	1	1	1	1	1	1	0	0	= 252
Y	0	0	0	0	0	0	1	0	1	0	0	0	= 40
	MSB						IB				LSB		

TABLE 3-7B
BINARY TO ASCII

BYTE	BITS 7	6	5	4	3	2	1	ASCII
1. SIGN	0	1	x	x	x	0	0	<
2. HIY	0	1	0	0	0	0	0	SP
3. XLOY	1	1	0	0	0	0	0	`
4. LOY	1	1	0	1	0	1	0	j
5. HIX	0	1	0	0	0	0	1	!
6. LOX	1	0	1	1	1	1	1	—

X = DON'T CARE

COMMAND: < SP ` j ! —

HyPLOT WORKSHEET

(Reproduce as needed)

PLOT POINT_____

X = _____

Y = _____

User should make use of a grid scale which matches the intended vector plot.

TABLE 3-6C
CONVERSION - X/Y PLOT INCREMENTS OF MOVE-TO-BINARY EQUIVALENTS

Bit # → / Binary Value	12 / 2048	11 / 1024	10 / 512	9 / 256	8 / 128	7 / 64	6 / 32	5 / 16	4 / 8	3 / 4	2 / 2	1 / 1	PLOT POINT VALUE ↓
X													=
Y													=
	MSB					IB					LSB		

TABLE 3-7C
BINARY TO ASCII

BYTE	BITS 7	6	5	4	3	2	1	ASCII
1. SIGN	0	1	x	x	x	y	x	
2. HIY	0	1						
3. XLOY	1	1	0					
4. LOY	1	1						
5. HIX	0	1						
6. LOX	1	0						

X = DON'T CARE

COMMAND: _____

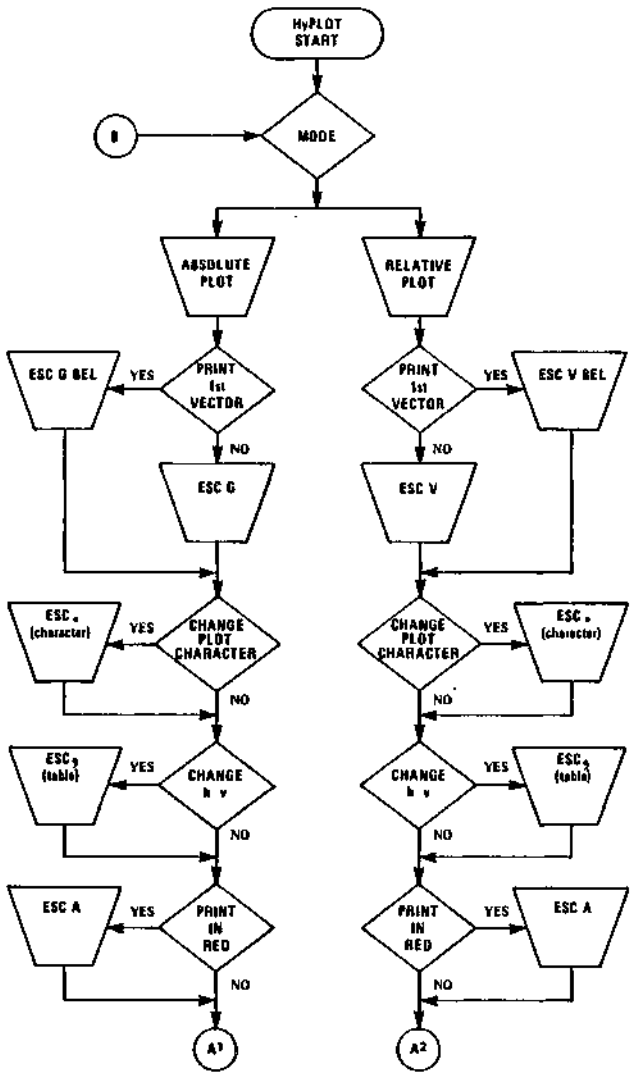

INITIATE HyPLOT – SET MODE & PARAMETERS

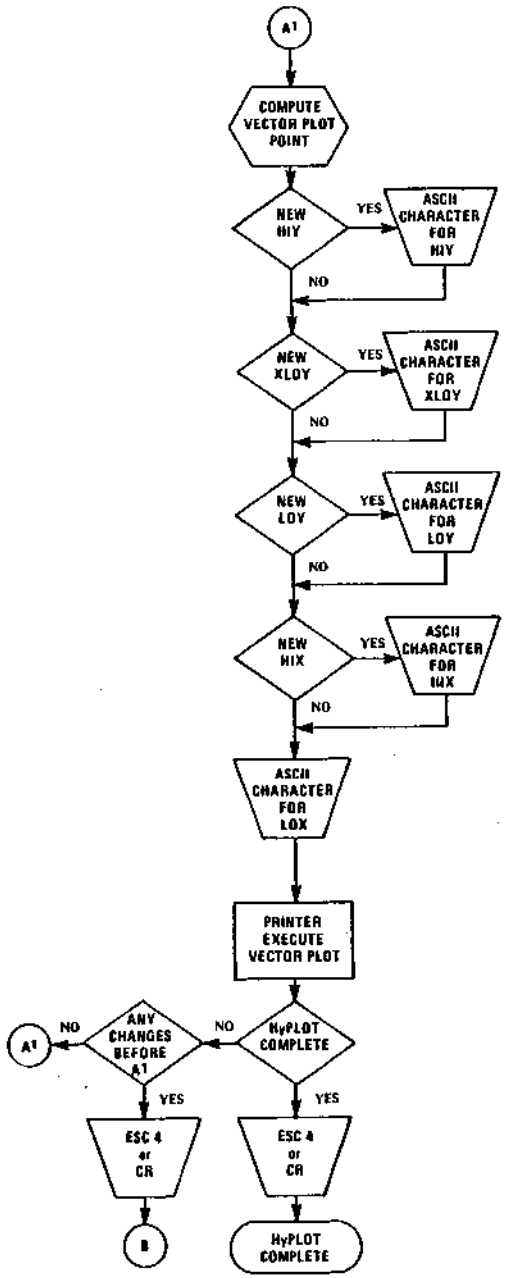

PLOT ABSOLUTE VECTORS

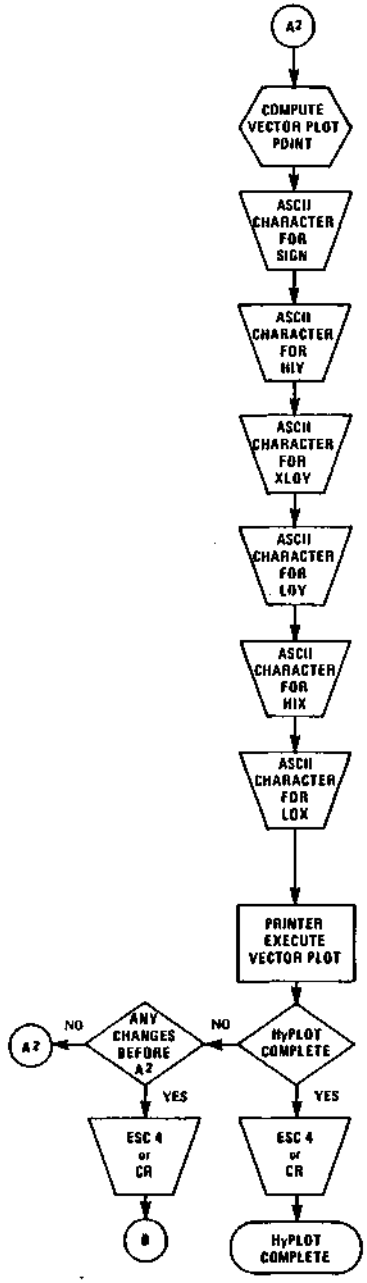

PLOT RELATIVE VECTORS

Figure 3-9
HyPLOT FLOWCHART

3.26 FEEDER SUPPORT (API-2 only)

The API-2 supports Diablo Models F31, F32, and F33 feed-on-demand cut sheet feeders. The F31 is a single tray feeder, the F32 a two tray feeder, and the F33 a two tray plus envelope feeder. All of these feeders operate with the same feeder interface hardware and firmware commands.

The feeder is controlled by ESC sequences and embedded text commands. These commands are:

Escape Sequence Commands

ESC EM 1	Feed from tray 1 (upper tray)
ESC EM 2	Feed from tray 2
ESC EM E	Feed from envelope hopper
ESC EM R	Remove (eject) paper (does not cause a feed)

Embedded Commands (see Note 4. below)

//1//	Select tray 1 (upper tray)
//2//	Select tray 2
//E//	Select envelope
//R//	Select Remove (eject) (does not cause a feed)
//C//	Select tray 1 for first feed, then select tray 2 thereafter or until a new command is issued.

ESC CR P and ESC SUB I reset commands will also initialize the feeder. The status of the feeder can be obtained through Status Byte 3 in Remote Diagnostics (see subsection 3.23.5).

The following points relate to operation of the API-2 with a sheet feeder.

1. The ESC sequences and feeder control panel operations will act on the feeder immediately.
2. The ESC sequences and embedded text commands are both active at all times when the feeder is installed and not in manual mode.
3. The embedded text commands must be the only printable characters on a line (control codes are allowed). The line must start and finish with a CR or LF. Note that the line feed (LF) will be executed.
4. The embedded text commands select trays only. A subsequent form feed or line feed over a page boundary will cause the last selected tray to be fed.
5. Any feed command (//x// or ESC EM x) for a nonexistent tray will be ignored.
6. Any feed command (//x// or ESC EM x) will be ignored when there is no feeder installed, or if the feeder is in manual mode.
7. The API-2 detects whether a feeder is present, and if so, which feeder it is.
8. Page size definition is the same, with or without a feeder. ESC FF (n) will define lines/page.
9. Vertical moves, such as a line feed, which cause movement beyond page boundaries will cause the system to automatically feed a sheet from the last tray fed or selected, so that the user perceives operation as with a continuous form.
10. When the API is in Graphics mode, crossing the bottom margin will not cause the next feed.
11. Reverse motion is not allowed across a page boundary or within the last 6 lines on a page.

12. Motion within the last 6 lines on a page is limited to minimum increments of 1/24 of an inch. Odd VMI increments will be rounded up to make them even.
13. When in auto mode, the feeder will center the printer's carriage for line feeds at the top of the page to facilitate entry of the paper into the outfeed chute.
14. If API is set for self-test with feeder installed, at power-up it will print self test with 84 columns of text and alternate between tray 1 and tray 2 (two tray feeders).

For complete instructions on operation of the feeder, refer to the Diablo Operator's Guide for the feeder being used.

3.27 SELF-TEST

The self-test mode is entered when the SELF TEST switch on the control panel is ON at power-on. The self-test consists of a ROM test, a RAM test and 96 lines of swirl text. Figure 3-10 shows a sample of API-1.5 self-test printout, and Figure 3-11 shows a sample for the API-2. The internal RAM listed in the printout is located in the 8031 CPU device on the API board. All of the tested ROM and RAM memory is located on the API circuit board; specific locations are identified on the API circuit board schematic in the Model 630 Maintenance Manual.

With the Model 630 ECS/API, the entire extended character set will be included in the swirl text printout if the control panel switches are set for ECS operation. However, since the printout is only 132 columns wide, several lines of the text must be printed before all of the characters have actually appeared in the printout.

If a sheet feeder is installed on the API-2 terminal, the self-test differs only in that the swirl text printout is 84 columns wide, and if it is a dual tray feeder, it will feed from alternate trays for each successive sheet of test printout.

```
        630-API...SELFTEST...!
        ROM1...OK
        ROM2...OK
        INTERNAL...RAM...OK
        EXTERNAL...RAM...OK
96 LINES ¢!"#$%&'()*+,-./0123456789:;<=>?@ABCDEFGHIJKLMNOPQRSTUVWXYZ[\]^_
         !"#$%&'()*+,-./0123456789:;<=>?@ABCDEFGHIJKLMNOPQRSTUVWXYZ[\]^_`
         "#$%&'()*+,-./0123456789:;<=>?@ABCDEFGHIJKLMNOPQRSTUVWXYZ[\]^_`a
         #$%&'()*+,-./0123456789:;<=>?@ABCDEFGHIJKLMNOPQRSTUVWXYZ[\]^_`ab
         $%&'()*+,-./0123456789:;<=>?@ABCDEFGHIJKLMNOPQRSTUVWXYZ[\]^_`abc
         %&'()*+,-./0123456789:;<=>?@ABCDEFGHIJKLMNOPQRSTUVWXYZ[\]^_`abcd
         &'()*+,-./0123456789:;<=>?@ABCDEFGHIJKLMNOPQRSTUVWXYZ[\]^_`abcde
         '()*+,-./0123456789:;<=>?@ABCDEFGHIJKLMNOPQRSTUVWXYZ[\]^_`abcdef
         132 COLUMNS ————————————————————————————————————————————————————→
```

Figure 3-10. SELF-TEST PRINTOUT - API-1.5

```
        630-API.SELFTEST
        ROM1.OK
        ROM2.OK
        INT.RAM.OK
        EXT.RAM.OK
96 LINES ¢!"#$%&'()*+,-./0123456789:;<=>?@ABCDEFGHIJKLMNOPQRSTUVWXYZ[\]^_
         !"#$%&'()*+,-./0123456789:;<=>?@ABCDEFGHIJKLMNOPQRSTUVWXYZ[\]^_`
         "#$%&'()*+,-./0123456789:;<=>?@ABCDEFGHIJKLMNOPQRSTUVWXYZ[\]^_`a
         #$%&'()*+,-./0123456789:;<=>?@ABCDEFGHIJKLMNOPQRSTUVWXYZ[\]^_`ab
         $%&'()*+,-./0123456789:;<=>?@ABCDEFGHIJKLMNOPQRSTUVWXYZ[\]^_`abc
         %&'()*+,-./0123456789:;<=>?@ABCDEFGHIJKLMNOPQRSTUVWXYZ[\]^_`abcd
         &'()*+,-./0123456789:;<=>?@ABCDEFGHIJKLMNOPQRSTUVWXYZ[\]^_`abcde
         '()*+,-./0123456789:;<=>?@ABCDEFGHIJKLMNOPQRSTUVWXYZ[\]^_`abcdef
         ()*+,-./0123456789:;<=>?@ABCDEFGHIJKLMNOPQRSTUVWXYZ[\]^_`abcdefg
         )*+,-./0123456789:;<=>?@ABCDEFGHIJKLMNOPQRSTUVWXYZ[\]^_`abcdefgh
         132 COLUMNS ————————————————————————————————————————————————————
```

Figure 3-11. SELF-TEST PRINTOUT - API-2

3.28 PRINT SPEED MEASUREMENT

The SRQ line in the IEEE-488 interface, which is unused by the API and held HI in normal operation, can be used as a start/stop flag for print speed measurement with a user-originated speed measurement text. To execute a print speed test, the host sends: BEL, ESC CAN CAN, the print measurement text, BEL, ESC CAN CAN. The SRQ signal will be toggled each time ESC CAN CAN is executed from the print buffer. The controller can use the state of SRQ to start and stop the timer.

It is not recommended that this feature be used in a system environment that supports the SRQ line for serial and parallel poll purposes.

3.29 EXTENDED CHARACTER SET (ECS) (API-2 Only)

The ECS mode is selected by switch 1 of the left DIP switch module on the API-2 control panel. In ECS mode, the Model 630 is capable of operating with the ECS print wheels which can contain up to 192 separate print characters in two rows with two characters per print wheel spoke.

At the time of this writing, two ECS print wheels are supported by the firmware of the API: 1) the Elite 12 Scientific wheel; 2) the Pica 10 Teletex wheel. The print tables for these two print wheels are stored internally in ROM and are selected by the left rotary switch on the API-2 control panel. For the Elite 12 Scientific wheel, the rotary switch must be set to position 0; for the Pica 10 Teletex wheel, the rotary switch must be set to position 2.

Figures 4-7 and 4-8 in Section 4 of this manual contain the ASCII code charts for the two ECS print wheels. These charts list the ASCII code assignments for discrete and constructed characters for the ECS print wheels. The constructed characters are formed automatically by printing a combination of 2 or 3 discrete characters in sequence, with little or no carriage movement to separate the characters. The ASCII code assignments for the print characters are based on Teletex and Xerox character sets.

The print wheel characters are divided into a "primary" character set and a "supplementary" character set, as indicated by the code charts. The primary character set includes print characters plus the full set of standard ASCII control characters. Note that two of the print wheel characters in the primary character set must be addressed by sending ESC Y and ESC Z since the codes 20 hex and 7F hex are reserved for NUL and DEL and thus are not available for print character addressing.

It is also possible to down-load print table data into RAM memory of the Model 630 from the host. The firmware simply expands the RAM table size to 448 bytes to accomodate 224 characters. If the print wheel table is supplied through the down-load procedure, the most significant bit (MSB) of the second byte of each character designates the outer or inner row character (see subsection 3.22). If the bit is 0, it addresses the outer row character.

There are two methods of operating the ECS print wheels using ASCII addressing, as defined below.

3.29.1 8-Bit ASCII

This is an expansion of the standard 7-bit ASCII method of print wheel addressing. The 8-Bit ASCII mode is selected by switch 3 of the left DIP switch module on the API-2 control panel. When 8 bits are used for print wheel addressing, the code assignments expand to include codes 80 - FF, in addition to the codes 00 - 7F available with standard 7-bit ASCII, as shown in Figures 4-7 and 4-8.

00 - 7F . . . . . Standard 7-bit ASCII code assignments for control codes and print characters. Codes in this range address the primary character set.

80 - FF . . . . . Codes in this range address the supplementary character set.

NOTE: Codes 80 - 9F will be ignored at power-up or after SI is received from host. To access codes 80 - 9F, the host first must send SO. After the API receives SO, all codes are accessible.

3.29.2 7-Bit ASCII (SO - SI)

In the 7-bit ASCII mode of operation for ECS print wheels, ASCII codes 00 - 7F are used in conjunction with control codes SO and SI to address both the primary and supplementary character sets. The SI code selects the primary character set (including control codes), and the SO code selects the supplementary character set. The primary character set (including control codes) is selected automatically at power-up. To switch to the supplementary character set, the host must send an SO control code. While the supplementary character set is selected, SI and SP (space) are the only control codes recognized by the API. To switch back to the primary character set (including control codes), the host must send an SI control code, or a remote reset (ESC CR P) or printer initialize (ESC SUB I) must be executed.

SECTION 4
OPERATING REFERENCES

This Section contains various charts and tables supporting Section 3, OPERATING CONSIDERATIONS.

4.1 API PRINT WHEEL SUPPORT

The print wheel groups listed below are directly supported by the firmware of the Model 630 API.

****

API-1.5

Diablo P/N	96-Char. Plastic	Diablo P/N	96-Char. Metal
38101-01	Pica 10	311900-01	Titan 10
38102-02	Elite 12	311901-01	Cubic PS
38107-01	Courier 72	311903-01	Elite 12
38147	Forms Gothic S-10		

****

API-2

Group I - Metal

English: Xerox 88-Character
English: Xerox 92-Character (UK)
English: Xerox 96-Character (UK)
English: Diablo 96-Character (Titan 10)
Scandanavian 92-Character
Scandanavian 96-Character
Norsk 96-Character
French 92-Character
French 96-Character
German 92-Character
German 96-Character
APL 96-Character

Group II - Plastic

English: Diablo 96-Character
Scandanavian 96-Character
Norsk 96-Character
French 96-Character
German 96-Character
APL 96-Character

Group III - ECS Plastic

Teletex 192-Character
Scientific 192-Character

4.2 ASCII CODING SYSTEM

The ASCII Coding System is based on the American National Standard Code for Information Interchange, Standard No. X3.4-1977 of the American National Standards Institute, Incorporated.

Bits	$b_7 \rightarrow$	0	0	0	0	1	1	1	1
	$b_6 \rightarrow$	0	0	1	1	0	0	1	1
	$b_5 \rightarrow$	0	1	0	1	0	1	0	1
b_4 b_3 b_2 b_1	COLUMN→ ↓ROW↓	0	1	2	3	4	5	6	7
0 0 0 0	0	NUL	DLE	SP	0	@	P	`	p
0 0 0 1	1	SOH	DC1	!	1	A	Q	a	q
0 0 1 0	2	STX	DC2	"	2	B	R	b	r
0 0 1 1	3	ETX	DC3	#	3	C	S	c	s
0 1 0 0	4	EOT	DC4	$	4	D	T	d	t
0 1 0 1	5	ENQ	NAK	%	5	E	U	e	u
0 1 1 0	6	ACK	SYN	&	6	F	V	f	v
0 1 1 1	7	BEL	ETB	'	7	G	W	g	w
1 0 0 0	8	BS	CAN	(	8	H	X	h	x
1 0 0 1	9	HT	EM	)	9	I	Y	i	y
1 0 1 0	10	LF	SUB	*	:	J	Z	j	z
1 0 1 1	11	VT	ESC	+	;	K	[	k	{
1 1 0 0	12	FF	FS	,	<	L	\	l	¦
1 1 0 1	13	CR	GS	-	=	M	]	m	}
1 1 1 0	14	SO	RS	.	>	N	^	n	~
1 1 1 1	15	SI	US	/	?	O	_	o	DEL

All characters in these two columns and SP (Space) are nonprinting. DEL (Delete) does not print in Remote mode. When a character is received with parity or framing error, the print wheel character addressed by ASCII code 3F (HEX) is printed in place of the received character.

Figure 4-1. ASCII CODE CHART

4.3 PRINT WHEEL ASCII CODE CHARTS (Typical)

The print wheel code charts provide a general sample of technical data for the different types of print wheels. Specific technical data pertaining to each print wheel available from Diablo Systems is contained in the Diablo Print Wheel Data Books 1 and 2 (see subsection 4.4 of this manual).

The codes 20 hex and 7F hex are interpreted as "space" and "delete" respectively by the Model 630 and thus are not available for print wheel addressing. In place of these two codes, the ESC sequences ESC Y and ESC Z are used to address certain characters and thus provide a complete set of 96 codes for print wheel addressing. ESC Y and/or ESC Z are listed on the following charts where applicable.

The hexadecimal code assignments shown on the print wheel code charts are based on ASCII and Teletex character code assignments. These are the proper codes for typical operation wherein the print characters are addressed via the print tables residing in the firmware of the Model 630. The Hexadecimal-Decimal conversion table below is provided for the benefit of those users with systems that accept program code in decimal form instead of the hexadecimal form shown on the print wheel charts.

Table 4-1
HEXADECIMAL-DECIMAL CONVERSION

HEX UNITS	HEX 16's: 0	1	2	3	4	5	6	7	8	9	A	B	C	D	E	F
0	0	16	32	48	64	80	96	112	128	144	160	176	192	208	224	240
1	1	17	33	49	65	81	97	113	129	145	161	177	193	209	225	241
2	2	18	34	50	66	82	98	114	130	146	162	178	194	210	226	242
3	3	19	35	51	67	83	99	115	131	147	163	179	195	211	227	243
4	4	20	36	52	68	84	100	116	132	148	164	180	196	212	228	244
5	5	21	37	53	69	85	101	117	133	149	165	181	197	213	229	245
6	6	22	38	54	70	86	102	118	134	150	166	182	198	214	230	246
7	7	23	39	55	71	87	103	119	135	151	167	183	199	215	231	247
8	8	24	40	56	72	88	104	120	136	152	168	184	200	216	232	248
9	9	25	41	57	73	89	105	121	137	153	169	185	201	217	233	249
A	10	26	42	58	74	90	106	122	138	154	170	186	202	218	234	250
B	11	27	43	59	75	91	107	123	139	155	171	187	203	219	235	251
C	12	28	44	60	76	92	108	124	140	156	172	188	204	220	236	252
D	13	29	45	61	77	93	109	125	141	157	173	189	205	221	237	253
E	14	30	46	62	78	94	110	126	142	158	174	190	206	222	238	254
F	15	31	47	63	79	95	111	127	143	159	175	191	207	223	239	255

ESC Y			ESC Z		
¢	2	94	¬	1	95
		3			1

(MSB) b_7				0			0			1			1			1			1		
			b_6	1			1			0			0			1			1		
			b_5	0			1			0			1			0			1		
b_4	b_3	b_2	b_1																		
0	0	0	0	SP			0	37	59	@	62	34	P	26	70	`	56	40	p	90	6
									3			4			4			1			4
0	0	0	1	!	88	28	1	33	63	A	11	85	Q	27	69	a	84	12	q	92	4
						2			2			3			4			2			4
0	0	1	0	"	70	26	2	34	62	B	8	88	R	13	83	b	78	18	r	81	15
						2			3			4			4			4			2
0	0	1	1	#	46	50	3	35	61	C	10	86	S	14	82	c	79	17	s	88	8
						3			2			3			3			2			3
0	1	0	0	$	44	52	4	36	60	D	22	74	T	16	80	d	76	20	t	86	10
						3			3			4			3			3			2
0	1	0	1	%	47	49	5	38	58	E	15	81	U	23	73	e	83	13	u	91	5
						3			3			4			4			2			3
0	1	1	0	&	69	27	6	39	57	F	9	87	V	30	66	f	89	7	v	73	23
						3			3			4			4			3			2
0	1	1	1	'	54	42	7	40	56	G	24	72	W	4	92	g	74	22	w	0	0
						1			2			4			4			4			3
1	0	0	0	(	60	36	8	41	55	H	17	79	X	32	64	h	87	9	x	75	21
						2			3			4			4			3			3
1	0	0	1	)	58	38	9	42	54	I	20	76	Y	25	71	i	85	11	y	94	2
						2			3			2			4			2			4
1	0	1	0	*	61	35	:	12	84	J	29	67	Z	7	89	j	72	24	z	95	1
						3			1			3			3			3			3
1	0	1	1	+	45	51	;	31	65	K	28	68	[	53	43	k	93	3	{	49	47
						2			2			4			2			3			2
1	1	0	0	,	3	93	<	57	39	L	21	75	\	63	33	l	77	19	¦	59	37
						1			2			4			2			2			2
1	1	0	1	—	43	53	=	48	48	M	6	90	]	51	45	m	71	25	}	67	29
						1			3			4			2			4			2
1	1	1	0	.	5	91	>	50	46	N	19	77	^	64	32	n	82	14	~	52	44
						1			2			4			1			3			1
1	1	1	1	/	66	30	?	65	31	O	18	78	_	55	41	o	80	16	DEL		
						2			2			3			7			3			

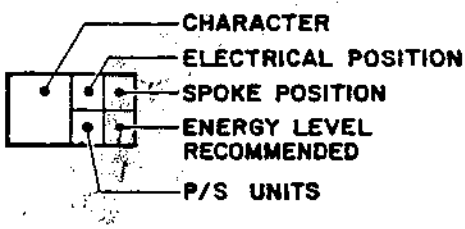

NOTES:

1. USE ENERGY SWITCH POSITION M FOR NORMAL USE, FOR MULTISTACK.
2. ◩ DESIGNATES RECOMMENDED LEVEL THAT DEVIATES FROM A STD HYTYPE II PRINTER.
3. CHARACTERS SHOWN ON THIS DRAWING DO NOT REFLECT AESTHETICS OF INDIVIDUAL TYPE STYLES.
4. ELECTRICAL POSITION IS PRINTWHEEL SPOKE POSITION AS VIEWED FROM THE CHARACTER SIDE OF THE PRINTWHEEL.

Figure 4-2. 96-CHARACTER PRINT WHEEL - PLASTIC

ESC Y

ESC	5	91
Y		3

b4	b3	b2	b1	(MSB) b7	0			0			1			1			1			1		
				b6	1			1			0			0			1			1		
				b5	0			1			0			1			0			1		
0	0	0	0		SP			0	86	10	@	75	21	P	10	86	,	41	18	p	67	29
										4			4			4			1			4
0	0	0	1		!	37	59	1	82	14	A	18	78	Q	52	44	a	59	37	q	72	24
							2			2			4			4			3			4
0	0	1	0		"	33	63	2	83	13	B	8	88	R	28	68	b	68	28	r	55	41
							2			3			4			4			3			2
0	0	1	1		#	92	4	3	84	12	C	36	60	S	14	82	c	62	34	s	51	45
							4			3			3			4			3			3
0	1	0	0		$	7	89	4	85	11	D	32	64	T	19	77	d	60	36	t	53	43
							4			3			4			3			3			3
0	1	0	1		%	79	17	5	87	9	E	16	80	U	34	62	e	58	38	u	63	33
							4			3			4			4			3			3
0	1	1	0		&	77	19	6	88	8	F	22	74	V	12	84	f	45	51	v	64	32
							4			3			4			4			3			3
0	1	1	1		'	23	73	7	89	7	G	40	56	W	42	54	g	65	31	w	54	42
							1			3			4			4			4			3
1	0	0	0		(	76	20	8	90	6	H	26	70	X	50	46	h	61	35	x	70	26
							2			4			4			4			3			3
1	0	0	1		)	74	22	9	91	5	I	25	71	Y	44	52	i	47	49	y	66	30
							2			3			3			4			2			3
1	0	1	0		*	15	81	:	29	67	J	21	75	Z	6	90	j	49	47	z	71	25
							3			2			3			3			3			3
1	0	1	1		+	11	85	;	27	69	K	46	50				k	69	27	.	39	16
							2			2			4						3			1
1	1	0	0		,	78	55	1/4	81	15	L	20	76				l	43	53			
							1			4			3						2			
1	1	0	1		—	35	61	=	9	87	M	38	58				m	48	48			
							1			2			4						4			
1	1	1	0		.	80	57	1/2	73	23	N	24	72				n	57	39			
							1			4			4						3			
1	1	1	1		/	31	65	?	17	79	O	30	66	_	13	83	o	56	40	DEL		
							2			2			4			1			3			

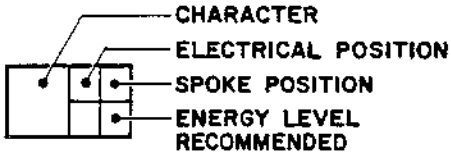

NOTES:

1. USE ENERGY SWITCH POSITION M FOR NORMAL USE, FOR MULTISTACK.
2. ◩ DESIGNATES RECOMMENDED LEVEL THAT DEVIATES FROM A STD HYTYPE II PRINTER.
3. CHARACTERS SHOWN ON THIS DRAWING DO NOT REFLECT AESTHETICS OF INDIVIDUAL TYPE STYLES.
4. ELECTRICAL POSITION IS PRINTWHEEL SPOKE POSITION AS VIEWED FROM THE CHARACTER SIDE OF THE PRINTWHEEL.

Figure 4-3. 88-CHARACTER PRINT WHEEL - METAL

ESC Y

¢	5	91	
		3	

(MSB) b_7				0			0			1			1			1			1		
			b_6	1			1			0			0			1			1		
			b_5	0			1			0			1			0			1		
b_4	b_3	b_2	b_1																		
0	0	0	0	SP			O	86	10 / 4	@	75	21 / 4	P	10	86 / 4	,	41	18 / 1	p	67	29 / 4
0	0	0	1	!	37	59 / 2	I	82	14 / 2	A	18	78 / 4	Q	52	44 / 4	a	59	37 / 3	q	72	24 / 4
0	0	1	0	"	33	63 / 2	2	83	13 / 3	B	8	88 / 4	R	28	68 / 4	b	68	28 / 3	r	55	41 / 2
0	0	1	1	#	92	4 / 4	3	84	12 / 3	C	36	60 / 3	S	14	82 / 4	c	62	34 / 3	s	51	45 / 3
0	1	0	0	$	7	89 / 4	4	85	11 / 3	D	32	64 / 4	T	19	77 / 3	d	60	36 / 3	t	53	43 / 3
0	1	0	1	%	79	17 / 4	5	87	9 / 3	E	16	80 / 4	U	34	62 / 4	e	58	38 / 3	u	63	33 / 3
0	1	1	0	&	77	19 / 4	6	88	8 / 3	F	22	74 / 4	V	12	84 / 4	f	45	51 / 3	v	64	32 / 3
0	1	1	1	'	23	73 / 1	7	89	7 / 3	G	40	56 / 4	W	42	54 / 4	g	65	31 / 4	w	54	42 / 3
1	0	0	0	(	76	20 / 2	8	90	6 / 4	H	26	70 / 4	X	50	46 / 4	h	61	35 / 3	x	70	26 / 3
1	0	0	1	)	74	22 / 2	9	91	5 / 3	I	25	71 / 3	Y	44	52 / 4	i	47	49 / 2	y	66	30 / 3
1	0	1	0	*	15	81 / 3	:	29	67 / 2	J	21	75 / 3	Z	6	90 / 3	j	49	47 / 3	z	71	25 / 3
1	0	1	1	+	11	85 / 2	;	27	69 / 2	K	46	50 / 4	2/3	3	93 / 4	k	69	27 / 3	.	39	16 / 1
1	1	0	0	,	78	55 / 1	1/4	81	15 / 4	L	20	76 / 3	£	4	92 / 4	l	43	53 / 2			
1	1	0	1	—	35	61 / 1	=	9	87 / 2	M	38	58 / 4	1/3	93	3 / 4	m	48	48 / 4			
1	1	1	0	.	80	57 / 1	1/2	73	23 / 4	N	24	72 / 4	3/4	94	2 / 4	n	57	39 / 3			
1	1	1	1	/	31	65 / 2	?	17	79 / 2	O	30	66 / 4	—	13	83 / 1	o	56	40 / 3	DEL		

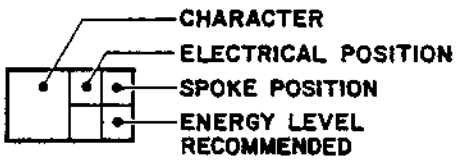

NOTES:

1. USE ENERGY SWITCH POSITION M FOR NORMAL USE, FOR MULTISTACK.
2. ◤ DESIGNATES RECOMMENDED LEVEL THAT DEVIATES FROM A STD HYTYPE II PRINTER.
3. CHARACTERS SHOWN ON THIS DRAWING DO NOT REFLECT AESTHETICS OF INDIVIDUAL TYPE STYLES.
4. ELECTRICAL POSITION IS PRINTWHEEL SPOKE POSITION AS VIEWED FROM THE CHARACTER SIDE OF THE PRINTWHEEL.

Figure 4-4. 92-CHARACTER PRINT WHEEL - METAL (Rank Xerox)

ESC Y		
¢	0	0
	5	3

ESC Z		
'	39	57
	5	1

(MSB) b_7				0			0			1			1			1			1		
			b_6	1			1			0			0			1			1		
			b_5	0			1			0			1			0			1		
b_4	b_3	b_2	b_1																		
0	0	0	0	SP			O	86	10	@	75	21	P	10	86	`	95	1	p	67	29
								5	4		8	4		6	4		5	1		5	4
0	0	0	1	!	37	59	1	82	14	A	18	78	Q	52	44	a	59	37	q	72	24
					3	2		5	2		7	4		7	4		5	3		5	4
0	0	1	0	"	33	63	2	83	13	B	8	88	R	28	68	b	68	28	r	55	41
					4	2		5	3		6	4		7	4		5	3		4	2
0	0	1	1	#	92	4	3	84	12	C	36	60	S	14	82	c	62	34	s	51	45
					6	4		5	3		7	3		5	4		5	3		4	3
0	1	0	0	$	7	89	4	85	11	D	32	64	T	19	77	d	60	36	t	53	43
					5	4		5	3		7	4		6	3		5	3		4	3
0	1	0	1	%	79	17	5	87	9	E	16	80	U	34	62	e	58	38	u	63	33
					8	4		5	3		6	4		7	4		5	3		5	3
0	1	1	0	&	77	19	6	88	8	F	22	74	V	12	84	f	45	51	v	64	32
					7	4		5	3		6	4		6	4		4	3		5	3
0	1	1	1	'	23	73	7	89	7	G	40	56	W	42	54	g	65	31	w	54	42
					2	1		5	3		7	4		8	4		5	4		7	3
1	0	0	0	(	76	20	8	90	6	H	26	70	X	50	46	h	61	35	x	70	26
					3	2		5	4		7	4		7	4		5	3		5	3
1	0	0	1	)	74	22	9	91	5	I	25	71	Y	44	52	i	47	49	y	66	30
					3	2		5	3		3	3		7	4		3	2		5	3
1	0	1	0	*	15	81	:	29	67	J	21	75	Z	6	90	j	49	47	z	71	25
					5	3		3	2		5	3		6	3		3	3		5	3
1	0	1	1	+	11	85	;	27	69	K	46	50	[	81	15	k	69	27	{	4	92
					5	2		3	2		7	4		3	2		5	3		3	2
1	1	0	0	,	78	18	<	41	55	L	20	76	\	3	93	l	43	53	|	73	23
					3	1		5	2		6	3		5	2		3	2		3	2
1	1	0	1	–	35	61	=	9	87	M	38	58	]	1	95	m	48	48	}	93	3
					4	1		5	2		8	4		3	2		8	4		3	2
1	1	1	0	.	80	16	>	5	91	N	24	72	^	2	94	n	57	39	~	94	2
					3	1		5	2		7	4		5	1		5	3		5	1
1	1	1	1	/	31	65	?	17	79	O	30	66	_	13	83	o	56	40	DEL		
					4	2		5	2		7	4		5	1		5	3			

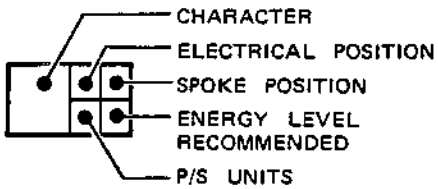

NOTES:

1. USE ENERGY SWITCH POSITION M FOR NORMAL USE, FOR MULTISTACK.
2. ◪ DESIGNATES RECOMMENDED LEVEL THAT DEVIATES FROM A STD HYTYPE II PRINTER.
3. CHARACTERS SHOWN ON THIS DRAWING DO NOT REFLECT AESTHETICS OF INDIVIDUAL TYPE STYLES.
4. ELECTRICAL POSITION IS PRINTWHEEL SPOKE POSITION AS VIEWED FROM THE CHARACTER SIDE OF THE PRINTWHEEL.

Figure 4-5. 96-CHARACTER PRINT WHEEL - METAL (Diablo)

ESC Y			ESC Z		
[	5	91	3	0	0
	5	2		5	2

b4	b3	b2	b1	(MSB) b7	0	0	1	1	1	1
				b6	1	1	0	0	1	1
				b5	0	1	0	1	0	1
0	0	0	0	SP		0 (86,10 / 5,4)	@ (75,21 / 8,4)	P (10,86 / 6,4)	, (41,18 / 3,1)	p (67,29 / 5,4)
0	0	0	1	! (37,59 / 3,2)	1 (82,14 / 5,2)	A (18,78 / 7,4)	Q (52,44 / 7,4)	a (59,37 / 5,3)	q (72,24 / 5,4)
0	0	1	0	" (33,63 / 4,2)	2 (83,13 / 5,3)	B (8,88 / 6,4)	R (28,68 / 7,4)	b (68,28 / 5,3)	r (55,41 / 4,2)
0	0	1	1	μ (92,4 / 6,3)	3 (84,12 / 5,3)	C (36,60 / 7,3)	S (14,82 / 5,4)	c (62,34 / 5,3)	s (51,45 / 4,3)
0	1	0	0	$ (7,89 / 5,4)	4 (85,11 / 5,3)	D (32,64 / 7,4)	T (19,77 / 6,3)	d (60,36 / 5,3)	t (53,43 / 4,3)
0	1	0	1	% (79,17 / 8,4)	5 (87,9 / 5,3)	E (16,80 / 6,4)	U (34,62 / 7,4)	e (58,38 / 5,3)	u (63,33 / 5,3)
0	1	1	0	& (77,19 / 7,4)	6 (88,8 / 5,3)	F (22,74 / 6,4)	V (12,84 / 6,4)	f (45,51 / 4,3)	v (64,32 / 5,3)
0	1	1	1	' (23,73 / 2,1)	7 (89,7 / 5,3)	G (40,56 / 7,4)	W (42,54 / 8,4)	g (65,31 / 5,4)	w (54,42 / 7,3)
1	0	0	0	((76,20 / 3,2)	8 (90,6 / 5,4)	H (26,70 / 7,4)	X (50,46 / 7,4)	h (61,35 / 5,3)	x (70,26 / 5,3)
1	0	0	1	) (74,22 / 3,2)	9 (91,5 / 5,3)	I (25,71 / 3,3)	Y (44,52 / 7,4)	i (47,49 / 3,2)	y (66,30 / 5,3)
1	0	1	0	* (15,81 / 5,3)	: (29,67 / 3,2)	J (21,75 / 5,3)	Z (6,90 / 6,3)	j (49,47 / 3,3)	z (71,25 / 5,3)
1	0	1	1	+ (11,85 / 5,2)	; (27,69 / 3,2)	K (46,50 / 7,4)	] (3,93 / 6,4)	k (69,27 / 5,3)	. (39,16 / 3,1)
1	1	0	0	, (78,55 / 3,1)	¼ (81,15 / 6,4)	L (20,76 / 6,3)	£ (4,92 / 5,4)	l (43,53 / 3,2)	< (1,95 / 6,2)
1	1	0	1	— (35,61 / 4,1)	= (9,87 / 5,2)	M (38,58 / 8,4)	° (93,3 / 5,1)	m (48,48 / 8,4)	2 (2,94 / 5,2)
1	1	1	0	. (80,57 / 3,1)	½ (73,23 / 6,4)	N (24,72 / 7,4)	¾ (94,2 / 6,4)	n (57,39 / 5,3)	> (95,1 / 6,2)
1	1	1	1	/ (31,65 / 4,2)	? (17,79 / 5,2)	O (30,66 / 7,4)	— (13,83 / 5,1)	o (56,40 / 5,3)	DEL

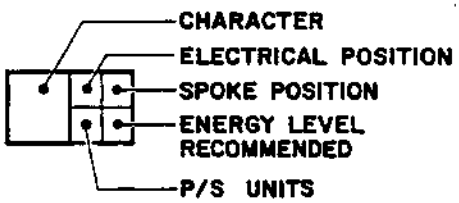

NOTES:

1. USE ENERGY SWITCH POSITION M FOR NORMAL USE, FOR MULTISTACK.
2. ◩ DESIGNATES RECOMMENDED LEVEL THAT DEVIATES FROM A STD HYTYPE II PRINTER.
3. CHARACTERS SHOWN ON THIS DRAWING DO NOT REFLECT AESTHETICS OF INDIVIDUAL TYPE STYLES.
4. ELECTRICAL POSITION IS PRINTWHEEL SPOKE POSITION AS VIEWED FROM THE CHARACTER SIDE OF THE PRINTWHEEL.

Figure 4-6. 96-CHARACTER PRINT WHEEL - METAL (Rank Xerox)

ASCII HEX		PRIMARY CHARACTER SET								SUPPLEMENTARY CHARACTER SET							
	HI / LO	0	1	2	3	4	5	6	7	8	9	A	B	C	D	E	F
	0	NUL	DLE	SP	0	@	P	`	p		≠	SP	Π	ℯ	π	$_0$	^{0}
	1	SOH	DC1	!	1	A	Q	a	q	←	∝			α	ρ	$_1$	^{1}
	2	STX	DC2	"	2	B	R	b	r	→	∂		Σ	β	σ	$_2$	^{2}
	3	ETX	DC3	#	3	C	S	c	s	↑		Γ		γ	τ	$_3$	^{3}
	4	EOT	DC4	$	4	D	T	d	t	↓		Δ	T	δ		$_4$	^{4}
	5	ENO	NAK	%	5	E	U	e	u	⊙			Φ	ε	ϕ	$_5$	^{5}
	6	ACK	SYN	&	6	F	V	f	v	□				ζ	χ	$_6$	^{6}
	7	BEL	ETB	'	7	G	W	g	w	¨			Ψ	η	ψ	$_7$	^{7}
	8	BS	CAN	(	8	H	X	h	x	¶		Θ	Ω	θ	ω	$_8$	^{8}
	9	HT	EM	)	9	I	Y	i	y	†			∑	ι	ℓ	$_9$	^{9}
	A	LF	SUB	*	:	J	Z	j	z	£			∇	κ	•	±	+
	B	VT	ESC	+	;	K	[	k	{	⌠		Λ	(	λ	√	—	−
	C	FF	FS	,	<	L	\	l	|	⌡			)	μ	}	≦	×
	D	CR	GS	−	=	M	]	m	}	°			[	ν	{	≧	÷
	E	SO	RS	.	>	N	^	n	~		Å	Ξ	]	ξ	.	~	∞
	F	SI	US	/	?	O	_	o	DEL	Note 3			∫		/	≈	

See Note 2

ESC Y ¢

ESC Z ´

NOTES :

1. ECS 7-bit ASCII Mode
   - Primary Character Set accessed by codes 00–7F after power-up/initialize or after SI received from host.
   - Supplementary Character Set accessed by codes 00–7F after SO received from host.
2. ECS 8-bit ASCII Mode
   - After power-up/initialize all characters can be accessed except those addressed by 80–9F.
   - After SO received from host, all characters can be accessed.
3. In ECS 7-bit ASCII Mode, code 0F represents SI control character in both Primary and Supplementary Character Set.
4. For spoke assignments, hammer energies, and PS unit values pertaining to ECS print wheels, refer to Print Wheel Data Book-2 (Diablo Publication No. 90044-02).

Figure 4-7. ECS ELITE 12 SCIENTIFIC PRINT WHEEL

ASCII HEX	PRIMARY CHARACTER SET								SUPPLEMENTARY CHARACTER SET							
LO \ HI	0	1	2	3	4	5	6	7	8	9	A	B	C	D	E	F
0	NUL	DLE	SP	0	@	P	`	p		⁰	SP	°	`	—	Ω	κ
1	SOH	DC1	!	1	A	Q	a	q	₀	ƒ	¡	±	`	¹	Æ	æ
2	STX	DC2	"	2	B	R	b	r	₁	Φ	¢	²	´	®	Đ	đ
3	ETX	DC3	#	3	C	S	c	s	₂	r	£	³	^	©	ª	ð
4	EOT	DC4	$	4	D	T	d	t	₃	⁴	$	×	~	™	Ħ	ħ
5	ENO	NAK	%	5	E	U	e	u	₄	⁵	¥	µ	¯	†	¯	ı
6	ACK	SYN	&	6	F	V	f	v	₅	⁶	#	¶	˘	´	Ĵ	ĵ
7	BEL	ETB	'	7	G	W	g	w	₆	⁷	§	·	˙	˙	Ĺ	ĺ
8	BS	CAN	(	8	H	X	h	x	₇	⁸	¤	÷	¨	ç	Ł	ł
9	HT	EM	)	9	I	Y	i	y	₈	⁹	~	˘	¨	˝	Ø	ø
A	LF	SUB	*	:	J	Z	j	z	₉	è	á	à	°	ˇ	Œ	œ
B	VT	ESC	+	;	K	[	k	{	ℓ	é	<	>	¸	^	º	ß
C	FF	FS	,	<	L	\	l	|	°	¦	,	¼	‗	⅛	Þ	þ
D	CR	GS	-	=	M	]	m	}	ñ	ä	F	½	˝	⅜	Ŧ	ŧ
E	SO	RS	.	>	N	^	n	~	å	ü	.	¾	˛	⅝	Ŋ	ŋ
F	SI	US	/	?	O	_	o	DEL	Note 3	ö	/	¿	ˇ	⅞	ʼn	

See Note 2

ESC Y	ESC Z
ϕ	‗

NOTES :

1. ECS 7-bit ASCII Mode
   - Primary Character Set accessed by codes 00–7F after power-up/initialize or after SI received from host.
   - Supplementary Character Set accessed by codes 00–7F after SO received from host.
2. ECS 8-bit ASCII Mode
   - After power-up/initialize all characters can be accessed except those addressed by 80–9F.
   - After SO received from host, all characters can be accessed.
3. In ECS 7-bit ASCII Mode, code 0F represents SI control character in both Primary and Supplementary Character Set.
4. For spoke assignments, hammer energies, and PS unit values pertaining to ECS print wheels, refer to Print Wheel Data Book-2 (Diablo Publication No. 90044-02).

Figure 4-8. ECS PICA 10 TELETEX PRINT WHEEL

4.4 THE DIABLO PRINT WHEEL DATA BOOKS

The Data Books provide specific data pertaining to each Diablo/Xerox print wheel available for use on Diablo printers and terminals. At present there are two Data Books: Data Book-1 covers the standard 88-, 92-, and 96-character print wheels; Print Wheel Data Book-2 covers the ECS print wheels, and print wheels for the Diablo Model 620 printer.

Print Wheel Data Book-1 - Publication No. 90044-01

Print Wheel Data Book-2 - Publication No. 90044-02

The excerpt below from a typical page in one of the Data Books shows the type of information provided. This type of information is essential when the Model 630 is going to be used with direct spoke addressing (Program Mode).

DIABLO 96 — U.S.

TITAN 10 (96-Character Metalized) P/N 311900-01

CHARACTER(1)	(3) ¢	!	"	#	$	%	&	'	(	)	*	+	,	-	.	/
HEX Address	20	21	22	23	24	25	26	27	28	29	2A	2B	2C	2D	2E	2F
Elect. Spoke	0	37	33	92	7	79	77	23	76	74	15	11	78	35	80	
Prop. Sp. Units	5	3	4	6	5	8	7	2	3	3	5	5	3	4	3	
Ham. Energy(2)	3	2	2	4	4	4	4	1	2	2	3	2	1	1		

2	3	4	5	6	7	8	9	:	;	<	=	>	?	@	A	B	C	D	E
32	33	34	35	36	37	38	39	3A	3B	3C	3D	3E	3F	40	41	42	43	44	
83	84	85	87	88	89	90	91	29	27	41	9	5	17	75	18	8	36	32	
5	5	5	5	5	5	5	5	3	3	5	5	5	5	8	7	6	7		
3	3	3	3	3	3	4	3	2	2	2	2	2	2	4	4	4	3		

To order the Print Wheel Data Book/s, contact:

Diablo Systems, Incorporated
Retail Store
1510 Trimble Road
San Jose, California, USA 95131
(408) 263-7704

4.5 DECIMAL VALUE TABLES

The Decimal Value Tables are used to determine the third character (n) to use in 3-character sequences for setting format factors and for absolute tabbing. The associated procedures are covered in the following subsections.

Setting HMI is covered in subsection 3.9.4.1
Setting VMI is covered in subsection 3.9.4.2
Lines Per Page is covered in subsection 3.9.4.3
Absolute Horizontal Tab is covered in subsection 3.13.1
Absolute Vertical Tab is covered in subsection 3.13.2

The following list summarizes the corresponding ESC code sequences:

ESC US (n)	Set HMI
ESC RS (n)	Set VMI
ESC FF (n)	Lines Per Page
ESC HT (n)	Absolute Horizontal Tab
ESC VT (n)	Absolute Vertical Tab

Table 4-2 gives a listing of decimal values for ASCII characters.

Table 4-2
DECIMAL VALUES OF ASCII CHARACTERS

	UNITS									
TENS	0	1	2	3	4	5	6	7	8	9
0		SOH	STX	ETX	EOT	ENQ	ACK	BEL	BS	HT
10	LF	VT	FF	CR	SO	SI	DLE	DC1	DC2	DC3
20	DC4	NAK	SYN	ETB	CAN	EM	SUB	ESC	FS	GS
30	RS	US	SP	!	"	#	$	%	&	'
40	(	)	*	+	,	–	.	/	0	1
50	2	3	4	5	6	7	8	9	:	;
60	<	=	>	?	@	A	B	C	D	E
70	F	G	H	I	J	K	L	M	N	O
80	P	Q	R	S	T	U	V	W	X	Y
90	Z	[	\	]	^	_	`	a	b	c
100	d	e	f	g	h	i	j	k	l	m
110	n	o	p	q	r	s	t	u	v	w
120	x	y	z	{	|	}	~			

Table 4-3
ASCII VALUES FOR ESC SEQUENCES
Set HMI
Set VMI

HMI/VMI	ASCII Character	HMI/VMI	ASCII Character	HMI/VMI	ASCII Character	HMI/VMI	ASCII Character	HMI/VMI	ASCII Character
0	CTRL A (SOH)	26	CTRL [ESC	51	4	76	M	101	f
1	CTRL B (STX)	27	CTRL \ (FS)	52	5	77	N	102	g
2	CTRL C (ETX)	*28	CTRL] (GS)	53	6	78	O	103	h
3	CTRL D (EOT)	**29	CTRL ^ (RS)	54	7	79	P	104	i
4	CTRL E (ENQ)	30	CTRL – (US)	55	8	80	Q	105	j
5	CTRL F (ACK)	31	SPACE	56	9	81	R	106	k
6	CTRL G (BEL)	32	!	57	:	82	S	107	l
7	CTRL H BACKSPACE	33	"	58	;	83	T	108	m
8	CTRL I TAB	34	#	59	<	84	U	109	n
9	CTRL J LINEFEED	35	$	60	=	85	V	110	o
10	CTRL K (VT)	36	%	61	>	86	W	111	p
11	CTRL L (FF)	37	&	62	?	87	X	112	q
12	CTRL M RETURN	38	'	63	@	88	Y	113	r
13	CTRL N (SO)	39	(	64	A	89	Z	114	s
14	CTRL O (SI)	40	)	65	B	90	[	115	t
15	CTRL P (DLE)	41	*	66	C	91	\	116	u
16	CTRL Q (DC1)	42	+	67	D	92	]	117	v
17	CTRL R (DC2)	43	,	68	E	93	^	118	w
18	CTRL S (DC3)	44	-	69	F	94	_	119	x
19	CTRL T (DC4)	45	.	70	G	95	`	120	y
20	CTRL U (NAK)	46	/	71	H	96	a	121	z
21	CTRL V (SYN)	47	0	72	I	97	b	122	{
22	CTRL W (ETB)	48	1	73	J	98	c	123	|
23	CTRL X (CAN)	49	2	74	K	99	d	124	}
24	CTRL Y (EM)	50	3	75	L	100	e	125	~
25	CTRL Z (SUB)								

*Diablo Typewriter Paired keyboard uses ` (accent grave)
**Diablo Typewriter Paired keyboard uses = (equals symbol)

Table 4-4
ASCII VALUES FOR ESC SEQUENCES
Set Lines/Page
Set Absolute Horizontal Tab
Set Absolute Vertical Tab

Lines or Position	ASCII Character	Lines or Position	ASCII Character	Lines or Position	ASCII Character	Lines or Position	ASCII Character	Lines or Position	ASCII Character
1	CTRL A (SOH)	26	CTRL Z (SUB)	51	3	76	L	101	e
2	CTRL B (STX)	27	CTRL [ESC	52	4	77	M	102	f
3	CTRL C (ETX)	28	CTRL \ (FS)	53	5	78	N	103	g
4	CTRL D (EOT)	*29	CTRL] (GS)	54	6	79	O	104	h
5	CTRL E (ENQ)	**30	CTRL ^ (RS)	55	7	80	P	105	i
6	CTRL F (ACK)	31	CTRL – (US)	56	8	81	Q	106	j
7	CTRL G (BEL)	32	SPACE	57	9	82	R	107	k
8	CTRL H BACKSPACE	33	!	58	:	83	S	108	l
9	CTRL I TAB	34	"	59	;	84	T	109	m
10	CTRL J LINEFEED	35	#	60	<	85	U	110	n
11	CTRL K (VT)	36	$	61	=	86	V	111	o
12	CTRL L (FF)	37	%	62	>	87	W	112	p
13	CTRL M RETURN	38	&	63	?	88	X	113	q
14	CTRL N (SO)	39	'	64	@	89	Y	114	r
15	CTRL O (SI)	40	(	65	A	90	Z	115	s
16	CTRL P (DLE)	41	)	66	B	91	[	116	t
17	CTRL Q (DC1)	42	*	67	C	92	\	117	u
18	CTRL R (DC2)	43	+	68	D	93	]	118	v
19	CTRL S (DC3)	44	,	69	E	94	^	119	w
20	CTRL T (DC4)	45	–	70	F	95	_	120	x
21	CTRL U (NAK)	46	.	71	G	96	`	121	y
22	CTRL V (SYN)	47	/	72	H	97	a	122	z
23	CTRL W (ETB)	48	0	73	I	98	b	123	{
24	CTRL X (CAN)	49	1	74	J	99	c	124	|
25	CTRL Y (EM)	50	2	75	K	100	d	125	}
								126	~

*Diablo Typewriter Paired keyboard uses ` (accent grave)
**Diablo Typewriter Paired keyboard uses = (equals symbol)

Table 4-5
CHARACTER PROPORTIONAL SPACE UNITS - METAL PRINT WHEELS

PW POSITION	CHARACTER	PS UNIT	PW POSITION	CHARACTER	PS UNIT	PW POSITION	CHARACTER	PS UNIT	PW POSITION	CHARACTER	PS UNIT
1	(□)	(3)	25	I	3	49	j	3	73	½	6
2	(^)	(5)	26	H	7	50	X	7	74	)	3
3	⅔ (\)	6 (5)	27	;	3	51	i	4	75	@	8
4	£ ({)	5 (3)	28	R	7	52	Q	7	76	(	3
5	¢ (})	5	29	:	3	53	t	4	77	&	7
6	Z	6	30	O	7	54	w	7	78	,	3
7	$	5	31	/	4	55	r	4	79	%	8
8	B	6	32	D	7	56	o	5	80	.	3
9	=	5	33	"	4	57	n	5	81	¼	6
10	P	6	34	U	7	58	e	5	82	1	5
11	+	5	35	–	4	59	a	5	83	2	5
12	V	6	36	C	7	60	d	5	84	3	5
13	_	5	37	!	3	61	h	5	85	4	5
14	S	5	38	M	8	62	c	5	86	0	5
15	*	5	39	.	3	63	u	5	87	5	5
16	E	6	40	G	7	64	v	5	88	6	5
17	?	5	41	,	3	65	g	5	89	7	5
18	A	7	42	W	8	66	y	5	90	8	5
19	T	6	43	I	3	67	p	5	91	9	5
20	L	6	44	Y	7	68	b	5	92	#	6
21	J	5	45	f	4	69	k	5	93	⅓ (})	6 (3)
22	F	6	46	K	7	70	x	5	94	¾ (~)	6 (5)
23	'	2	47	i	3	71	z	5	95	(`)	(5)
24	N	7	48	m	8	72	q	5	0 (HOME)	(¢)	(5)

NOTES:
1. Units = 1/120 inch (.212mm) carriage movement.
2. Characters and PS unit values listed in this table represent 88-character "Titan 10", 92-character "Titan 10" (UK), and 96-character "Titan 10" print wheels. Parentheses ( ) are used where characters and/or PS units of the 96-character wheel differ from those of the 88 and 92-character wheels. PW POSITION utilization is 5 thru 92 for 88-character wheels, 3 thru 94 for 92-character wheels, and 1 thru 0 for 96-character wheels. For similar data on other fonts refer to the Diablo Print Wheel Data Book, Publication No. 90044-XX.

Table 4-6
CHARACTER PROPORTIONAL SPACE UNITS - 96-CHARACTER PLASTIC PRINT WHEELS

PW POSITION	CHARACTER	PS UNIT	PW POSITION	CHARACTER	PS UNIT	PW POSITION	CHARACTER	PS UNIT	PW POSITION	CHARACTER	PS UNIT
1	¬	4	25	Y	6	49	{	3	73	v	5
2	¢	5	26	P	5	50	>	5	74	g	5
3	,	3	27	Q	6	51	]	4	75	x	5
4	W	7	28	K	6	52	~	5	76	d	5
5	.	3	29	J	4	53	[	4	77	l	3
6	M	7	30	V	6	54	'	2	78	b	5
7	Z	5	31	;	3	55	–	6	79	c	5
8	B	5	32	X	6	56	\	5	80	o	5
9	F	5	33	1	5	57	<	5	81	r	4
10	C	6	34	2	5	58	)	3	82	n	5
11	A	6	35	3	5	59	¦	2	83	e	5
12	:	3	36	4	5	60	(	3	84	a	5
13	R	6	37	0	5	61	•	4	85	i	3
14	S	5	38	5	5	62	@	7	86	t	4
15	E	5	39	6	5	63	\	4	87	h	5
16	T	5	40	7	5	64	^	5	88	s	4
17	H	6	41	8	5	65	?	5	89	f	4
18	O	6	42	9	5	66	/	4	90	p	5
19	N	6	43	-	5	67	}	3	91	u	5
20	I	3	44	$	5	68	!	3	92	q	5
21	L	5	45	+	5	69	&	6	93	k	5
22	D	6	46	#	5	70	"	4	94	y	5
23	U	6	47	%	5	71	m	7	95	z	5
24	G	6	48	=	5	72	j	2	0	w	7

NOTES:
1. Units = 1/120 inch (.212mm) carriage movement.
2. Characters and PS unit values listed in this table represent a 96 character plastic print wheel.

Table 4-7
PRINT WHEEL PROGRAM MODE - CHARACTERS FOR HAMMER ENERGY AND RIBBON ADVANCE

HAMMER ENERGY	RIBBON ADVANCE 1	2	3	4	5	6	7	8	9	10	11	12	13	14	15
1	DC1	DC2	DC3	DC4	NAK	SYN	ETB	CAN	EM	SUB	ESC	FS	GS	RS	US
2	!	"	#	$	%	&	'	(	)	*	+	,	-	.	/
3	1	2	3	4	5	6	7	8	9	:	;	<	=	>	?
4	A	B	C	D	E	F	G	H	I	J	K	L	M	N	O
	Q	R	S	T	U	V	W	X	Y	Z	[	/	]	^	_
	a	b	c	d	e	f	g	h	i	j	k	l	m	n	o
	q	r	s	t	u	v	w	x	y	z	{	|	}	~	DEL

XEROX

Diablo Systems Incorporated
24500 Industrial Boulevard
Hayward, California 94545

A Xerox Company

XEROX® and Diablo are trademarks of XEROX CORPORATION

Printed in U.S.A.