DIGITAL EQUIPMENT CORPORATION
MAYNARD, MASSACHUSETTS

PARTS LIST

MADE BY ROBICHARD DATE 6/5/69	CHECKED D. HEALEY DATE 6/6/69	SECTION 1
ENG S. ZNAMIEROWSKI DATE 6/10/69	PROD R. ANTONUICIO DATE 6/12/69	ISSUED SECT. 1

ITEM NO.	DWG NO./PART NO.	DESCRIPTION	QUANTITY/VARIATION 716-0
1	D-MD-5308466-0-0	PANEL, MTG 716 P.S.	1
2	B-MD-5308465-0-0	BRACKET MTG. TERMINAL	1
3	1105397	DIODE PACK DM-2	1
4	1609588	TRANSFORMER #F64-U TRIAD	1
5	9007919	CONN SOLDERLESS #50906 ARKLESS	20
6	9007234	BUSHING JUNC TERM ORN #DC-202-1 HEYMAN	3
7	9007237	BUSHING JUNC TERM BLK, #DC-202-1 HEYMAN	3
8	9007232	BUSHING JUNC TERM BLU, #DC-202-1 HEYMAN	4
9	9007235	BUSHING JUNC TERM WHT, #DC-202-1 HEYMAN	7
10	9007231	BUSHING JUNC TERM RED, #DC-202-1 HEYMAN	3
11	9007238	TERM TAB T-202-S HEYMAN	20
12	9006022-1	SCR PHL HD PAN #6-32 x 3/8 LG SST	9
13	9007794-1	SCR PHL HD PAN #6-32 x 11/16 LG SST	2
14	9006633	WASH INT TOOTH LOCK #6 SST	8
15	9006071-1	SCR PHL HD PAN #10-32 x 3/8 LG SST	4
16	9006635	WASH INT TOOTH LOCK #10 SST	4
17	9007031	TIE WRAP SST-1B PANDUIT	AR
18	9107560-1	WIRE BUSSING #22 AWG	AR
19	9107305-02	TUBING, SHRINKABLE, RED 3/16 D x 9/16 LG	2
20	9107370-99	WIRE, STRANDED #14 TEF INS WHT	AR
21	9107370-66	WIRE, STRANDED #14 TEF INS BLU	AR
22	9107370-33	WIRE, STRANDED #14 TEF INS ORN	AR

TITLE	ASSY NO.	SIZE	CODE	NUMBER	REV.	ECO NO.
INDICATOR POWER SUPPLY 716	D-UA-716-0-0 SHEET 1 OF 2	A	PL	716-0-0 DIST.	F	716-00008

DEC FORM NO.16-1031
DRA 110

DIGITAL EQUIPMENT CORPORATION
MAYNARD, MASSACHUSETTS

PARTS LIST

MADE BY ROBICHARD DATE 6/5/69	CHECKED D. HEALEY DATE 6/6/69	SECTION 1
ENG S. ZNAMIEROWSKI DATE 6/10/69	PROD R. ANTONUICIO DATE 6/12/69	ISSUED SECT. 1

ITEM NO.	DWG NO./PART NO.	DESCRIPTION	QUANTITY/VARIATION 716-0
23	9107370-00	WIRE, STRANDED #14 TEF INS BLK	AR
24	A-DC-5308448-0-0	DECAL, 716 POWER SUPPLY	AR
25		THERMAL COMPOUND #340 DOW CORNING	AR
26	1009437	CAP 18000 MFD 10V	1
27	1300165	RESISTOR 5ohm 25W 5%	1
28	9006033	SCR PHL PAN HD 6-32 x 2-½ SST	1
29	9009052	CAP MOUNTING BRACKET	1
30	9006829	SPACER ½AFX x 3/8LG #10 HOLE AL	1
31	9007776	TAB #61349-1 AMP	2
32	9006674	WASH #916 CORE WARD LEONARD	2
33	9006996	#4405 FUSE HOLDER	1
34	9007209	½ AMP S.B. FUSE	1
35	9006859	THREADED STAND OFF 3/4 6-32	2
36	7404508	FIBER COVER PLATE	1
37	9006633	A6 INTERNAL LOCK WASHER	2
38	A-PI-3700120-0-0	PACKAGING INSTRUCTION	1
REF	C-CS-716-0-1	CIRCUIT SCHEMATIC	

TITLE	ASSY NO.	SIZE	CODE	NUMBER	REV.	ECO NO.
INDICATOR POWER SUPPLY	D-UA-716-0-0 SHEET 2 OF 2	A	PL	716-0-0 DIST.	F	

DEC FORM NO.16-1031

This drawing and specifications, herein, are the property of Digital Equipment Corporation and shall not be reproduced or copied or used in whole or in part as the basis for the manufacture or sale of items without written permission. 1972

QUANTITY / VARIATION

ITEM NO.	DWG NO./PART NO.	DESCRIPTION	-1-0	-2-0	-3-0	-4-0	-5-0	-6-0	-7-0	-8-0	-9-0	-10-0	-11-0	-12-0	-13-0	-14-0	-15-0	-16-0	-17-0	-18-0	-19-0	-20-0
1.	D-SC-1209226-0-0	5 1/4 IN SNAP ON BEZEL	1	1	1	1	1			1	1	1	1	1	1	1	1	1	1	1	1	1
2.	9006801	SPACER 1/4 A.F. X 3/8 LG #6 HOLE	6	6	6	6	6			6	6	6	6	6	6	6	6	6	6	6	6	6
3.	D-IA-7407222-0-0	BENELEX	1	1	1	1	1			1	1	1	1	1	1	1	1	1	1	1	1	1
4.	C-SC-1209224-0-0	LATCH MOLDING	2	2	2	2	2			2	2	2	2	2	2	2	2	2	2	2	2	2
5.	9006835	WASHER INT TOOTH LOCK #10	4	4	4	4	4			4	4	4	4	4	4	4	4	4	4	4	4	4
6.	9006787	FLAT NYLON WASHER #6	6	6	6	6	6			6	6	6	6	6	6	6	6	6	6	6	6	6
7	C-MD-7407086-3-0	MTG BKT BENELEX	2	2	2	2	2			2	2	2	2	2	2	2	2	2	2	2	2	2
8.	9009143	STRUCTURAL ADHESIVE 3M*2216-A&B	A/R	A/R	A/R	A/R	A/R			A/R	A/R	A/R	A/R	A/R	A/R	A/R	A/R	A/R	A/R	A/R	A/R	A/R
9.	9006026-1	SCR PHL HD #6-32 X 3/4	6	6	6	6	6			6	6	6	6	6	6	6	6	6	6	6	6	6
10	9006071-1	SCR PHL PAN HD #10-32 X 3/8 SST	4	4	4	4	4			4	4	4	4	4	4	4	4	4	4	4	4	4
11	9008143-1	SCR PHL HD PAN SELF TAP #8-32 X 1/4	4	4	4	4	4			4	4	4	4	4	4	4	4	4	4	4	4	4
12.	9006022-1	SCR PHL HD PAN #6-32 X 3/8 SST	0	0	0	0	0			0	0	0	0	0	0	0	0	0	0	0	0	0
13	E-IA-7006409-1-0	LIGHT BOARD CABLE ASSY (RF09)	1	0	0	0	0			0	0	0	0	0	0	0	0	0	0	0	0	0
	E-IA-7006409-2-0	LIGHT BOARD CABLE ASSY (VT15)	0	1	0	0	0			0	0	0	0	0	0	0	0	0	0	0	0	0
	E-IA-7006409-3-0	LIGHT BOARD CABLE ASSY (RK08)	0	0	1	0	0			0	0	0	0	0	0	0	0	0	0	0	0	0
	E-IA-7006409-4-0	LIGHT BOARD CABLE ASSY (H963-E)	0	0	0	1	0			0	0	0	0	0	0	0	0	0	0	0	0	0
	E-IA-7006409-5-0	LIGHT BOARD CABLE ASSY (TC08)	0	0	0	0	1			0	0	0	0	0	0	0	0	0	0	0	0	0
	E-IA-7006409-8-0	LIGHT BOARD CABLE ASSY (H963-F)	0	0	0	0	0			1	0	0	0	0	0	0	0	0	0	0	0	0
	E-IA-7006409-9-0	LIGHT BOARD CABLE ASSY (NP02)	0	0	0	0	0			0	1	0	0	0	0	0	0	0	0	0	0	0
	E-IA-7006409-10-0	LIGHT BOARD CABLE ASSY (H963-M)	0	0	0	0	0			0	0	1	0	0	0	0	0	0	0	0	0	0
	E-IA-7006409-11-0	LIGHT BOARD CABLE ASSY (RP15)	0	0	0	0	0			0	0	0	1	0	0	0	0	0	0	0	0	0
	E-IA-7006409-12-0	LIGHT BOARD CABLE ASSY (RP15)	0	0	0	0	0			0	0	0	0	1	0	0	0	0	0	0	0	0
	E-IA-7006409-13-0	LIGHT BOARD CABLE ASSY (RF11)	0	0	0	0	0			0	0	0	0	0	1	0	0	0	0	0	0	0
	E-IA-7006409-14-0	LIGHT BOARD CABLE ASSY (DX38)	0	0	0	0	0			0	0	0	0	0	0	1	0	0	0	0	0	0
	E-IA-7006409-15-0	LIGHT BOARD CABLE ASSY (BD15)	0	0	0	0	0			0	0	0	0	0	0	0	1	0	0	0	0	0
	E-IA-7006409-16-0	LIGHT BOARD CABLE ASSY (RP11)	0	0	0	0	0			0	0	0	0	0	0	0	0	1	0	0	0	0
	E-IA-7006409-17-0	LIGHT BOARD CABLE ASSY (GRAPHIC 2/1)	0	0	0	0	0			0	0	0	0	0	0	0	0	0	1	0	0	0
	E-IA-7006409-18-0	LIGHT BOARD CABLE ASSY (DA26)	0	0	0	0	0			0	0	0	0	0	0	0	0	0	0	1	0	0
	E-IA-7006409-19-0	LIGHT BOARD CABLE ASSY (CAMAC)	0	0	0	0	0			0	0	0	0	0	0	0	0	0	0	0	1	0
	E-IA-7006409-20-0	LIGHT BOARD CABLE ASSY (FP15)	0	0	0	0	0			0	0	0	0	0	0	0	0	0	0	0	0	1
13	FOR VARIATIONS	21 & FUTURE SEE SHEET 2																				
14	D-IA-7407228-1-0	INLAY (RF09)	1	0	0	0	0			0	0	0	0	0	0	0	0	0	0	0	0	0
	D-IA-7407228-2-0	INLAY (VT15)	0	1	0	0	0			0	0	0	0	0	0	0	0	0	0	0	0	0
	D-IA-7407228-3-0	INLAY (RK08)	0	0	1	0	0			0	0	0	0	0	0	0	0	0	0	0	0	0
	D-IA-7407228-4-0	INLAY (H963-E)	0	0	0	1	0			0	0	0	0	0	0	0	0	0	0	0	0	0
	D-IA-7407228-5-0	INLAY (TC08)	0	0	0	0	1			0	0	0	0	0	0	0	0	0	0	0	0	0
	D-IA-7407228-6-0	INLAY (H963-F)	0	0	0	0	0			1	0	0	0	0	0	0	0	0	0	0	0	0
	D-IA-7407228-7-0	INLAY (NP02)	0	0	0	0	0			0	1	0	0	0	0	0	0	0	0	0	0	0
	D-IA-7407228-8-0	INLAY (H963M)	0	0	0	0	0			0	0	1	0	0	0	0	0	0	0	0	0	0
	D-IA-7407228-9-0	INLAY (RP15)	0	0	0	0	0			0	0	0	1	0	0	0	0	0	0	0	0	0
	D-IA-7407228-10-0	INLAY (RP15)	0	0	0	0	0			0	0	0	0	1	0	0	0	0	0	0	0	0
	D-IA-7407228-11-0	INLAY (RF11)	0	0	0	0	0			0	0	0	0	0	1	0	0	0	0	0	0	0
	D-IA-7407228-12-0	INLAY (DX38)	0	0	0	0	0			0	0	0	0	0	0	1	0	0	0	0	0	0
	D-IA-7407228-13-0	INLAY (BD15)	0	0	0	0	0			0	0	0	0	0	0	0	1	0	0	0	0	0
	D-IA-7407228-14-0	INLAY (RP11)	0	0	0	0	0			0	0	0	0	0	0	0	0	1	0	0	0	0
14	D-IA-7407228-15-0	INLAY (GRAPHIC 2/1)	0	0	0	0	0			0	0	0	0	0	0	0	0	0	1	0	0	0
14	FOR VARIATIONS	16 & FUTURE SEE SHEET 3																				

ITEM NO.	DWG NO./PART NO.	-21-0	-22-0	-23-0	-24-0	-25-0	-26-0	-27-0	-28-0	-29-0	-30-0	-31-0	-32-0	-33-0	-34-0	-35-0	-36-0	-37-0	-38-0	-39-0	-40-0	-41-0	-42-0	-43-0	-44-0	-45-0
1.	D-SC-1209226-0-0	1	1	1	1	1			1	1	1	1	1													
2.	9006801	6	6	6	6	6			6	6	6	6	6													
3.	D-IA-7407222-0-0	1	1	1	1	1			1	1	1	1	1													
4.	C-SC-1209224-0-0	2	2	2	2	2			2	2	2	2	2													
5.	9006835	4	4	4	4	4			4	4	4	4	4													
6.	9006787	6	6	6	6	6			6	6	6	6	6													
7	C-MD-7407086-3-0	2	2	2	2	2			2	2	2	2	2													
8.	9009143	A/R	A/R	A/R	A/R	A/R			A/R	A/R	A/R	A/R	A/R													
9.	9006026-1	6	6	6	6	6			6	6	6	6	6													
10	9006071-1	4	4	4	4	4			4	4	4	4	4													
11	9008143-1	4	4	4	4	4			4	4	4	4	4													
12.	9006022-1	0	0	0	0	0			0	0	0	0	0													
13	E-IA-7006409-1-0									0	0	0	0													
	E-IA-7006409-2-0									0	0	0	0													
	E-IA-7006409-3-0									0	0	0	0													
	E-IA-7006409-4-0									0	0	0	0													
	E-IA-7006409-5-0									1	0	0	0													
	E-IA-7006409-8-0									0	0	0	0													
	E-IA-7006409-9-0									0	0	0	0													
	E-IA-7006409-10-0									0	0	0	0													
	E-IA-7006409-11-0									0	0	0	0													
	E-IA-7006409-12-0									0	0	0	0													
	E-IA-7006409-13-0									0	0	0	0													
	E-IA-7006409-14-0									0	0	0	0													
	E-IA-7006409-15-0									0	0	0	0													
	E-IA-7006409-16-0									0	0	0	0													
	E-IA-7006409-17-0									0	0	0	0													
	E-IA-7006409-18-0									0	0	0	0													
	E-IA-7006409-19-0									0	0	0	0													
	E-IA-7006409-20-0									0	0	0	0													
14	D-IA-7407228-1-0									0	0	0	0													
	D-IA-7407228-2-0									0	0	0	0													
	D-IA-7407228-3-0									1	0	0	0													
	D-IA-7407228-4-0									0	0	0	0													
	D-IA-7407228-5-0									0	0	0	0													
	D-IA-7407228-6-0									0	0	0	0													
	D-IA-7407228-7-0									0	0	0	0													
	D-IA-7407228-8-0									0	0	0	0													
	D-IA-7407228-9-0									0	0	0	0													
	D-IA-7407228-10-0									0	0	0	0													
	D-IA-7407228-11-0									0	0	0	0													
	D-IA-7407228-12-0									0	0	0	0													
	D-IA-7407228-13-0									0	0	0	0													
	D-IA-7407228-14-0									0	0	0	0													
14	D-IA-7407228-15-0									0	0	0	0													

REVISIONS

REV.	CHANGE NO.	CHK	
B	RF09-00011 REVISED & REDRAWN		Jackie Monaco 12-4-69; D. VONADA 12-9-69
C	TC08-00003		Jackie Monaco 1-9-70; D. LAZUKA 1-12-70
D	NP02-00001		Jackie Monaco 2-12-70; C. VALENTINE 2-13-70
E	MISC-00056		T. Quillin 2-26-70; ZNAMEROWSKI 3/2/70
F	H963M-00001		T. Quillin 3-19-70; SWANSON 3/19/70
H	H963F-00002		Jackie Monaco 4-7-70; D. VONADA 4-7-70
J	RP15-00001		T. Quillin 4-16-70; ZEH 4-17-70
K	RF11-00001		T. Quillin 5/8/70; ERIKSEN 5/21-70
L	DX38-00001		10-21-70; VALENTINE 10-21-70
M	BD15-00001		10-21-70; MARTIN 10-21-70
N	RP11-00001		10-21-70; HOPKINS 12/22/70
P	7605900-00001		11-21-71; STEFANCWIC 11-24-70
R	7006331-00001		12-9-71; P. HOLMES

DRN	G. FLANDERS	DATE 4-22-69
CHK'D.	D. HEALY	DATE 4-23-69
ENG.	ZNAMIEROWSKI	DATE 6-10-69
PROJ. ENG.	D VONADA	DATE 6-10-69
PROD.	ANTONUCCIO	DATE 6-12-69
ASSY NO	D-AD-7006331-0-0	
SCALE	NONE	
SHEET	1 OF 3	

digital EQUIPMENT CORPORATION
MAYNARD, MASSACHUSETTS

TITLE
INDICATOR PANEL ASSY

SIZE	CODE	NUMBER	REV.
C	PL	7006331-0-0	AE

DIST. G

DEC FORM NO. DRC 100

SIZE C CODE PL NUMBER 7006331-0-0 REV. AE

This drawing and specifications, herein, are the property of Digital Equipment Corporation and shall not be reproduced or copied or used in whole or in part as the basis for the manufacture or sale of items without written permission. 1972

ITEM NO.	DWG NO./PART NO.	DESCRIPTION	-1-0	-2-0	-3-0	-4-0	-5-0	-6-0	-7-0	-8-0	-9-0	-10-0	-11-0	-12-0	-13-0	-14-0	-15-0	-16-0	-17-0	-18-0	-19-0	-20-0	-21-0	-22-0	-23-0	-24-0	-25-0	-26-0	-27-0	-28-0	-29-0	-30-0	-31-0	-32-0	-33-0	-34-0	-35-0	-36-0	-37-0	-38-0	-39-0	-40-0	-41-0	-42-0	-43-0	-44-0	-45-0
13	E-IA-7006409-21-0	LIGHT BOARD CABLE ASSY (CHAN SIM)	0	0	0	0	0			0	0	0	0	0	0	0	0	0	0	0	0	0	1	0	0	0	0				0	0	0	0														
	E-IA-7006409-22-0	LIGHT BOARD CABLE ASSY (MEM INT)	0	0	0	0	0			0		0	0	0	0	0	0	0	0	0	0	0	0	1	0	0	0				0	0	0	0														
	E-IA-7006409-23-0	LIGHT BOARD CABLE ASSY (CDC INT)	0	0	0	0	0			0	0	0	0	0	0	0	0	0	0	0	0	0	0	0	1	0	0				0	0	0	0														
	E-IA-7006409-24-0	LIGHT BOARD CABLE ASSY (DA 28)	0	0	0	0	0			0	0	0	0	0	0	0	0	0	0	0	0	0	0	0	0	1	0				0	0	0	0														
	E-IA-7006409-25-0	LIGHT BOARD CABLE ASSY (DA 28)	0	0	0	0	0			0	0	0	0	0	0	0	0	0	0	0	0	0	0	0	0	0	1				0	0	0	0														
	E-IA-7006409-26-0	LIGHT BOARD CABLE ASSY (GRAPHIC 2/I-B	0	0	0	0	0			0	0	0	0			0	0	0	0	0	0	0	0	0	0	0	0	1			0	0	0	0														
	E-IA-7006409-27-0	LIGHT BOARD CABLE ASSY (DX11)	0	0	0	0	0			0	0	0	0	0	0	0	0	0	0	0	0	0	0	0	0	0	0	0	1		0	0	0	0														
13	E-IA-7006409-28-0	LIGHT BOARD CABLE ASSY (TC10-C)	0	0	0	0	0			0	0	0	0	0	0	0	0	0	0	0	0	0	0	0	0	0	0	0	0	1	0	0	0	0														
13	E-IA-7006409-29-0	LIGHT BOARD CABLE ASSY (RP11C)	0	0	0	0	0			0	0	0	0	0	0	0	0	0	0	0	0	0	0	0	0	0	0	0	0	0	0	1	0	0														
13	E-IA-7006409-30-0	LIGHT-BOARD CABLE ASSY. 7009606-DC	0	0	0	0	0	0	0	0	0	0	0	0	0	0	0	0	0	0	0	0	0	0	0	0	0	0	0	0	0	0	1	0														
13	E-IA-7006409-31-0	LIGHT. BOARD CABLE ASSY. (RH11-TB)	0	0	0	0	0	0	0	0	0	0	0	0	0	0	0	0	0	0	0	0	0	0	0	0	0	0	0	0	0	0	0	1														

REVISIONS			
CHK	CHANGE NO.		REV.
W S	7605907-00001		S
	L. GILBERT 12-1-70		
	DESPO		
	P. DESPO 12-21-70		
K K	7006331-00002		T
	L. GILBERT 3-3-71		
	AUMANN		
	F. AUMann 3-4-71		
H K	7006331-00003		U
	KOZIOL 4-13-71		
	7006331-00004		V
	STEFANOWICZ 9-8-71		
	7006331-00005		W
	R. DIETER 1-25-72		
	7006331-00006		Y
	PRENTICE 2-3-72		
	7006331-00007		Z
	BUJNOWSKI 3-8-72		
	7006331-00008		AA
	ZNAMIEROWSKI 4-6-72		

DEC FORM NO. DRC 110

FIRST USED ON OPTION/MODEL

UNLESS OTHERWISE SPECIFIED
UNLESS OTHERWISE SPECIFIED
DIMENSION IN INCHES
TOLERANCES
DECIMALS ± .005 FRACTIONS ± 1/64 ANGLES ± 0°30'
FINAL SURFACE QUALITY ✓
REMOVE BURRS AND BREAK SHARP CORNERS

MATERIAL

FINISH

DRN. G. FLANDERS	DATE 4-22-69	
CHK'D. D. HEALY	DATE 4-23-69	
ENG. ZNAMIEROWSKI	DATE 6-10-69	
PROJ. ENG. D. YONADA	DATE 6-10-69	
PROD. ANTONUCCIO	DATE 6-12-69	
NEXT HIGHER ASSY. D-AD-7006331-00		
SCALE		
SHEET 2 OF 3		

DIGITAL EQUIPMENT CORPORATION MAYNARD MASSACHUSETTS

TITLE INDICATOR PANEL ASSY.

SIZE	CODE	NUMBER	REV.
C	PL	7006331-0-0	AE

DIST.

SIZE C CODE PL NUMBER 7006331-0-0 REV. AE

This drawing and specifications, herein, are the property of Digital Equipment Corporation and shall not be reproduced or copied or used in whole or in part as the basis for the manufacture or sale of items without written permission. 1972

ITEM NO.	DWG NO/PART NO	DESCRIPTION	-1-0	-2-0	-3-0	-4-0	-5-0	-6-0	-7-0	-8-0	-9-0	-10-0	-11-0	-12-0	-13-0	-14-0	-15-0	-16-0	-17-0	-18-0	-19-0	-20-0	-21-0	-22-0	-23-0	-24-0	-25-0	-26-0	-27-0	-28-0	-29-0	-30-0	-31-0	-32-0	-33-0	-34-0	-35-0	-36-0	-37-0	-38-0	-39-0	-40-0	-41-0	-42-0	-43-0	-44-0	-45-0
14	D-IA-7407228-16-0	INLAY (DA26)	0	0	0	0	0			0	0	0	0	0	0	0	0	0	0	1	0	0	0	0	0	0	0				0	0	0	0														
	D-IA-7407228-17-0	INLAY (CAMAC)	0	0	0	0	0			0	0	0	0	0	0	0	0	0	0	0	1	0	0	0	0	0	0				0	0	0	0														
	D-IA-7407228-18-0	INLAY FP15	0	0	0	0	0	0	0	0	0	0	0	0	0	0	0	0	0	0	0	1	0	0	0	0	0				0	0	0	0														
	D-IA-7407226-19-0	INLAY (CHAN SIM)	0	0	0	0	0			0	0	0	0	0	0	0	0	0	0	0	0	0	1	0	0	0	0				0	0	0	0														
	D-IA-7407228-20-0	INLAY (MEN INT)	0	0	0	0	0			0	0	0	0	0	0	0	0	0	0	0	0	0	0	1	0	0	0				0	0	0	0														
	D-IA-7407228-21-0	INLAY (CDC INT)	0	0	0	0	0			0	0	0	0	0	0	0	0	0	0	0	0	0	0	0	1	0	0				0	0	0	0														
	D-IA-7407228-22-0	INLAY (DA 28)	0	0	0	0	0			0	0	0	0	0	0	0	0	0	0	0	0	0	0	0	0	1	0				0	0	0	0														
	D-IA-7407228-23-0	INLAY (DA 28)	0	0	0	0	0			0	0	0	0	0	0	0	0	0	0	0	0	0	0	0	0	0	1				0	0	0	0														
	D-IA-7407228-24-0	INLAY (GRAPHIC 2/I-B)	0	0	0	0	0			0	0	0	0	0	0	0	0	0	0	0	0	0	0	0	0	0	0	1			0	0	0	0														
																																	0	0														
	D-IA-7407228-26-0	INLAY (TC10-C)	0	0	0	0	0			0	0	0	0	0	0	0	0	0	0	0	0	0	0	0	0	0	0	0	0	1	0	0	0	0														
14	D-IA-7407228-27-0	INLAY DX11-B	0	0	0	0	0			0	0	0	0	0	0	0	0	0	0	0	0	0	0	0	0	0	0	0	1		0	0	0	0														
14	D-IA-7407228-28-0	INLAY RP11-C	0	0	0	0	0	0	0	0	0	0	0	0	0	0	0	0	0	0	0	0	0	0	0	0	0	0	0	0	0	1	1	0														
15	A-PI-3700141-0-0	PACKAGING INSTRUCTIONS	1	1	1	1	1			1	1	1	1	1	1	1	1	1	1	1	1	1	1	1	1	1	1	1	1	1	1	1	1	0														
14	D-IA-7407228-29-0	INLAY RH11-TB	0	0	0	0	0	0	0	0	0	0	0	0	0	0	0	0	0	0	0	0	0	0	0	0	0	0	0	0	0	0	0	1														

REVISIONS	CHANGE NO.	REV.	CHK	
	RPIIC-00002	AB	PM	M. Garvin 10-5-72
				D. IVES
				10-16-72
	7006331-00009	AC		E. ALLgin 10-30-73
				N. ROY
	7006331-00010	AD		J. Chaten 7-2-74
				N. ROY
	7006331-00011	AE		D. VONADA 9-4-74
				D. VONADA 9-12-74

FIRST USED ON CHT 10N/MODEL

UNLESS OTHERWISE SPECIFIED
DIMENSION IN INCHES
TOLERANCES
DECIMALS ± .005 FRACTIONS ± 1/64 ANGLES ± 0°30'
FINAL SURFACE QUALITY ✓
REMOVE BURRS AND BREAK SHARP CORNERS

MATERIAL

FINISH

DRN. G. FLANDERS	DATE 4-22-69	
CHK'D. D. HEALY	DATE 4-23-69	
ENG. Z. NAMIEROWSKI	DATE 6-10-69	
PROJ. ENG. D. VONADA	DATE 6-10-69	
PROD. ANTONUCCIO	DATE 6-12-69	
NEXT HIGHER ASSY. D-AD-7006331-00		
SCALE		
SHEET 3 OF 3		

EQUIPMENT CORPORATION
MAYNARD MASSACHUSETTS

TITLE INDICATOR PANEL ASSY

SIZE	CODE	NUMBER	REV.
C	PL	7006331-0-0	AE

DIST.

DEC FORM NO. DRC 110

This drawing and specifications, herein, are the property of Digital Equipment Corporation and shall not be reproduced or copied or used in whole or in part as the basis for the manufacture or sale of items without written permission. 1974

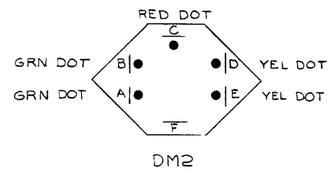

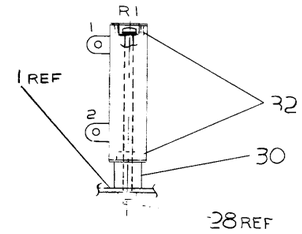

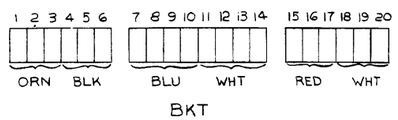

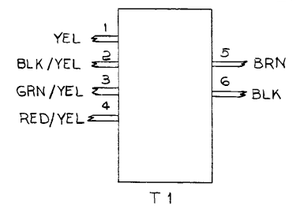

WIRE TABLE

ITEM NO	DESCRIPTION AWG	COLOR	CONNECTIONS FROM	TO	EQUIP FROM WITH ITEMS	EQUIP TO WITH ITEMS	REMARKS
—		YEL	T1-1	BKT-9	—	5	
—		RED/YEL	T1-4	BKT-14	—	5	
—		BRN	T1-5	F1	—	5	SOLDER F1
—		BLK	T1-6	BKT-17	—	5	
20	#14	WHT	DM2-A	BKT-12	5	5	
21	#14	BLU	DM2-B	BKT-7	5	5	
22	#14	ORN	DM2-C	R1-1	5	—	SOLDER R1-1
21	#14	BLU	DM2-D	BKT-8	5	5	
20	#14	WHT	DM2-E	BKT-13	5	5	
23	#14	BLK	DM2-F	R1-2	5	—	SOLDER R1-1
18	#22	—	BKT-1	BKT-3	—	—	1 THRU 3
18	#22	—	BKT-4	BKT-6	—	—	4 THRU 6
18	#22	—	BKT-7	BKT-10	—	—	7 THRU 10
18	#22	—	BKT-11	BKT-14	—	—	11 THRU 14
18	#22	—	BKT-15	BKT-17	—	—	15 THRU 17
18	#22	—	BKT-18	BKT-20	—	—	18 THRU 20
—		GRN/YEL	T1-3	—	—	19	TIE END
—		BLK/YEL	T1-2	—	—	19	TIE END
22	#14	ORN	R1-1	C1-A	—	31	SOLDER R1-1
22	#14	ORN	C1-A	BKT-3	31	5	
23	#14	BLK	R1-2	C1-B	—	31	SOLDER R1-2
23	#14	BLK	C1-B	BKT-4	31	5	
—	#14	BRN	F1	BKT-20	—	5	

NOTES

1. APPLY THERMAL COMPOUND ITEM #25 #340 DOW CORNING OR EQUIV TO CONTACTING SURFACES OF ITEM #1 & ITEM #3.

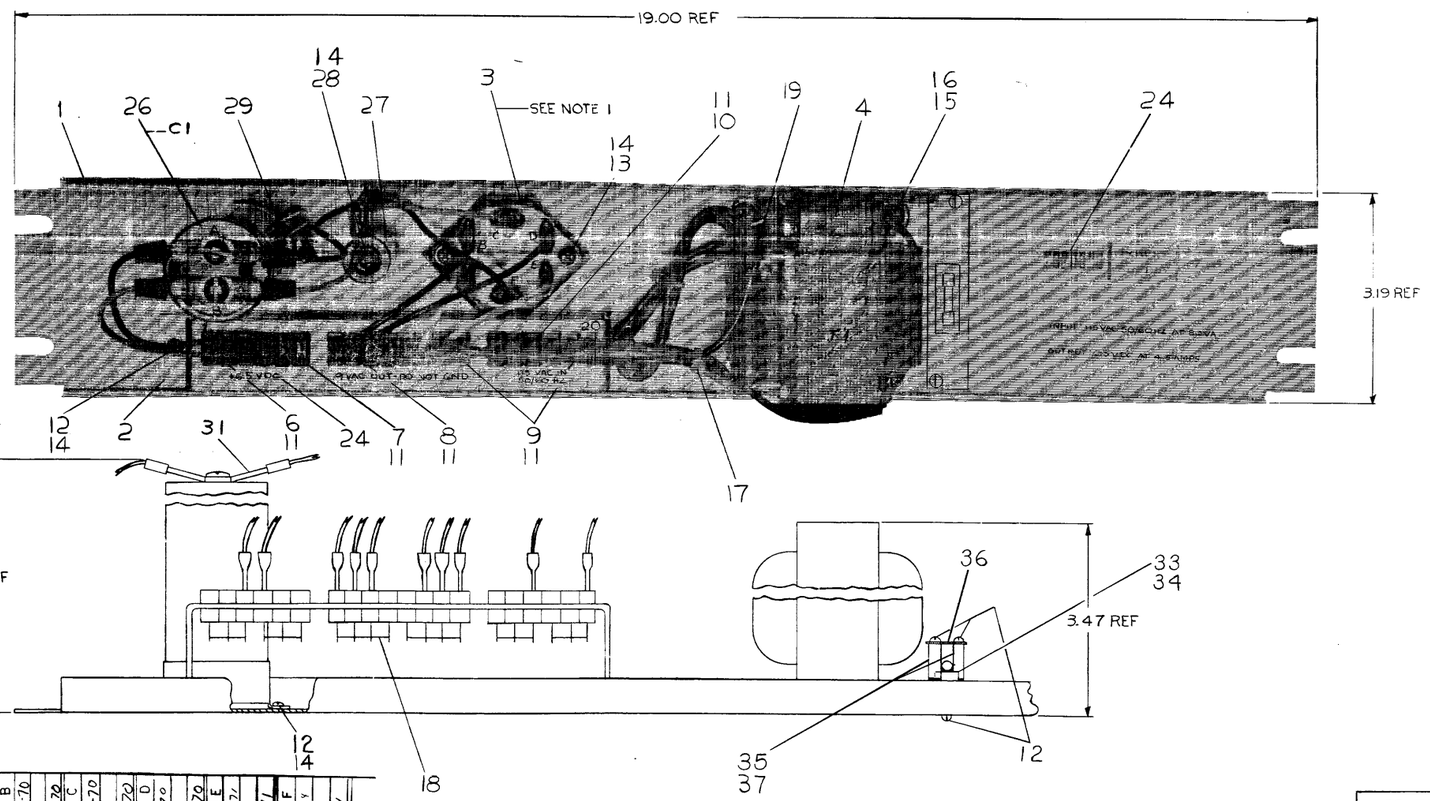

REVISIONS	CHANGE NO.	REV.
	716-00001	A
REDRAWN & REVISED		
D. VONADA		
716-00004		B
VONADA		
716-00005		C
VONADA		
716-00006		D
VONADA		
716-00007		E
VONADA		
716-00008		F
D. VONADA		

TOLERANCES
DECIMALS
.XXX = ± .005
.XX = ± .02
.X = ± .1

FIRST USED ON OPT/MOD: RFØ9

UNLESS OTHERWISE SPECIFIED
UNLESS OTHERWISE SPECIFIED DIMENSION IN INCHES
[redacted]
FINAL SURFACE QUALITY ✓
REMOVE BURRS AND BREAK SHARP CORNERS

MATERIAL
FINISH

QTY.	DESCRIPTION	PART NO.	ITEM NO.
	PARTS LIST		

		DATE
DRN.	ROBICHAUD	6-5-69
CHK'D.	D. HEALY	6-10-69
ENG.	Z NAMIEROWSKI	6-10-69
PROJ. ENG.	D. VONADA	6-10-69
PROD.	ANTONUCCIO	6-12-69

FIRST USED ON D-UA-RFØ9-Ø-Ø
SCALE 1/1
SHEET 1 OF 1

digital EQUIPMENT CORPORATION
MAYNARD, MASSACHUSETTS

TITLE
INDICATOR
POWER SUPPLY 716

SIZE	CODE	NUMBER	REV.
D	UA	716-0-0	F

DIST.

DEC FORM NO. DRD

The information and ideas herein, are the property of Digital Equipment Corporation and shall not be reproduced or copied or used in whole or in part as the basis for manufacturing or sale of items without written permission. 1972

LEGEND	
NUMBER	ASSY NO
7006331-1	D-UA-RF09-0-0
7006331-2	D-UA-VT15-0-0
7006331-2	D-UA-VT15-0-0
7006331-3	D-UA-RK08-0-0
7006331-4	D-UA-H963-0-0
7006331-5	D-UA-TC08-0-0
7006331-6	NOT USED
7006331-7	NOT USED
7006331-8	D-UA-H963-0-0
7006331-9	D-UA-NP02-0-0
7006331-10	D-UA-H963-M-0
7006331-11	D-UA-RP15-0-0
7006331-12	D-UA-RP15-0-0
7006331-13	D-UA-RF11-0-0
7006331-14	D-UA-DX38-0-0
7006331-15	D-UA-BD15-0-0
7006331-16	D-UA-RP11-0-0
7006331-17	D-UA-7605950-00
7006331-18	D-UA-DA26-0-0
7006331-19	D-UA-7605907-0-0
7006331-20	[illegible]
7006331-21	D-UA-7605956-0-0
7006331-22	D-UA-7605957-0-0
7006331-23	D-UA-7605955-0-0
7006331-24	D-UA-DA28-0-0
7006331-25	D-UA-DA28-0-0
7006331-26	A-MIL-7606112-0
7006331-27	D-UA-DX11-B
7006331-28	D-UA-TC10-C
7006331-29	D-UA-DX32-0-0
7006331-30	D-UA-RM11-C-0
7006331-31	D-UA-7606060-00
7006331-32	D-UA-RH11-TB-0-0

NOTES:

1. REMOVE ENERGY DIRECTORS (PLASTIC PROTRUSIONS) FROM BEZEL (ITEM 1) BY SCRAPING WITH PAINT SCRAPER. SECURE INLAY (ITEM 13) TO BEZEL (ITEM 1) WITH STRUCTURAL ADHESIVE (ITEM 8) USING EQUAL PARTS OF 2216A & 2216B. CARE MUST BE TAKEN NOT TO ALLOW ADHESIVE TO SHOW ON FRONT SIDE OF INDICATOR PANEL.

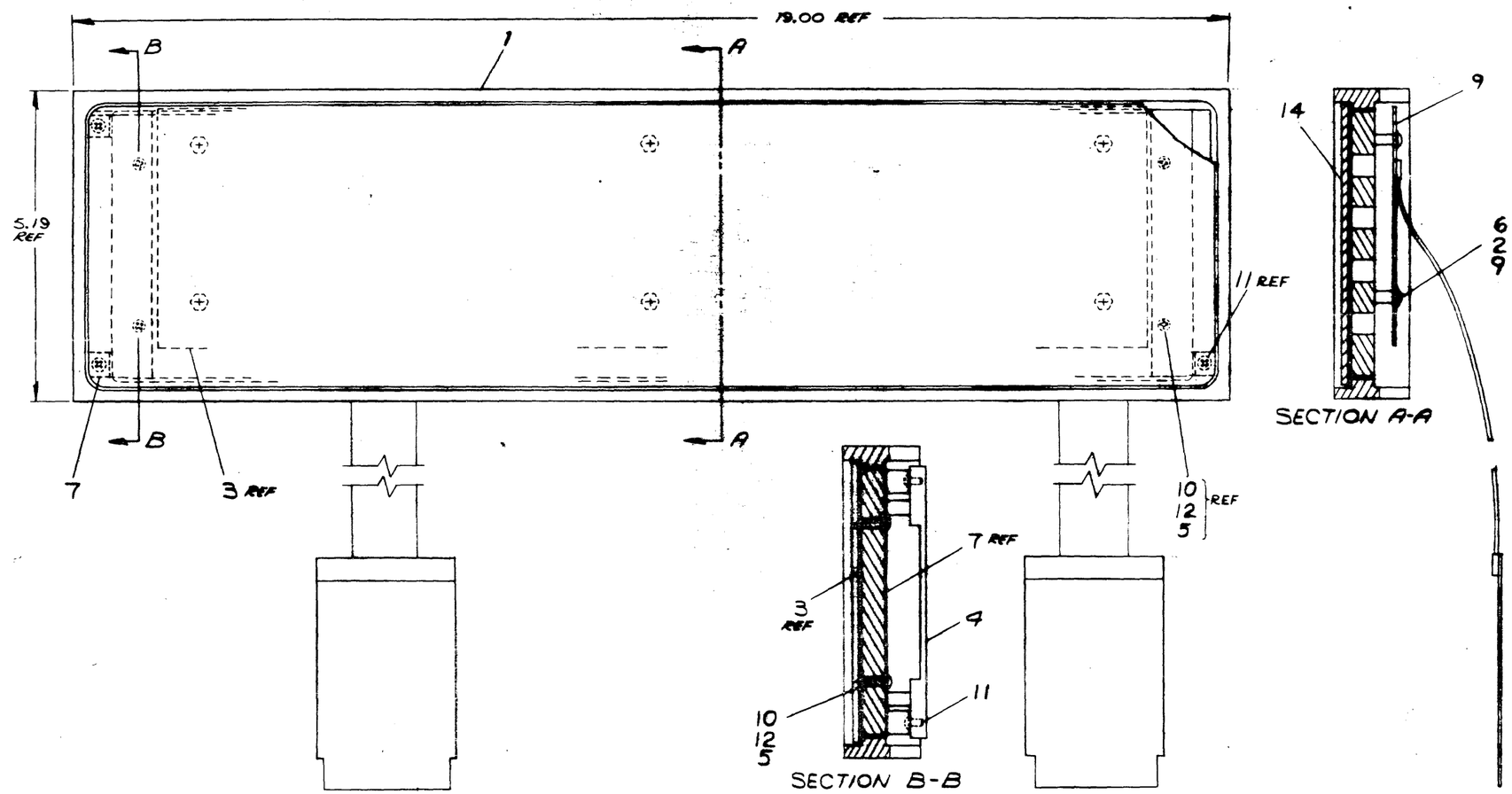

QTY.	DESCRIPTION	PART NO.	FIGURE NO.
	PARTS LIST		

DO NOT SCALE DRAWING
UNLESS OTHERWISE SPECIFIED
DIMENSION IN INCHES
TOLERANCES
[redacted] ANGLES ± 0°30'
FINAL SURFACE QUALITY
REMOVE BURRS AND BREAK SHARP CORNERS
MATERIAL —
FINISH —

		DATE
DRN	G. FLANDERS	3-22-69
CHK'D	D. HEALY	3-11-69
ENG	Z. NAMIEROWSKI	3-10-69
PROJ. ENG.	D. VONADA	3-10-69
MGR.	ANTONUCCIO	3-22-69

NEXT HIGHER ASSY SEE LOGBOOK
SCALE 1/1
SHEET 1 OF 1

[redacted] EQUIPMENT CORPORATION
MAYNARD, MASSACHUSETTS

TITLE INDICATOR PANEL ASSY

NUMBER D-AD-7006331-0-0 REV AE

REV		DATE	
AE	7006331-00009	10-30-72	AC
AD	7006331-00010	12-5-72	AD
AC	7006331-00011	9-3-74	AE

E. ALLEN N. ROY J. CHAMBERS N. ROY D. VONADA D. VONADA