EXPLORER 85

LEVEL D ASSEMBLY MANUAL

COPYRIGHT © 1979
BY NETRONICS RESEARCH AND DEVELOPMENT LTD.
RT. 202 NEW MILFORD, CT 06776

ALL RIGHTS RESERVED

SPECIFICATIONS

Level D provides 4K of 2114 RAM, power supply regulation, filtering decoupling components and sockets to expand the "EXPLORER 85" memory to 4K plus the original 256 bytes located in the 8155A. This memory can be located in 4K Blocks from 0000 to EFFF. Level D requires Level B as well as +8VDC C600 MA (unregulated).

Check your kit against the following parts list:

DESCRIPTION	QUANTITY
Integrated Circuit 2114	8
IC Socket 18 pin	8
.01 Disc Capacitor	8
10 uF Electrolytic Capacitor	1
Regulator LM340T-5 (or 7805)	1
Heat Sink	1
Screw 6-32 x 3/8"	1
Nut 6-32	1
Schematic & parts layout information	1

ASSEMBLY INSTRUCTIONS

( ) 1. Install 18 Pin sockets in locations U304-311 (Solder)

( ) 2. Install the 5Volt regulator (LM340T-5 or 7805) in location Q300. Position the Heat Sink as shown. Secure with 6-32 screw and nut.

( ) 3. Install 10uF Capacitor in location C300, note polarity (Solder)

( ) 4. Install .01 Disc Capacitors in locations C306-313 (Solder)

( ) 5. Insert the 2114's into IC Sockets U304-311. Note direction of Pin #1

( ) 6. The following chart describes the address selection jumpers required in position SW201. The address selections are valid in 4K Blocks. An optional 8 position dip switch may be installed at location SW201 if these addresses are to be modified frequently.

Note: There are two address charts. The first is for Revision B Mother Boards and the other is for all subsequent revisions.

NOTE: POWER MUST BE DISCONNECTED WHEN CHANGING ADDRESS SELECTOR SWITCH

FOR PC BOARDS - REVISION B

FOR REVISION B MOTHERBOARDS

ADDRESS (8K Block)	SW201 JUMPERS 8	7	6	5	4	3	2	1
0000-0FFF	IN	-	-	IN	IN	-	-	IN
1000-1FFF	IN	-	-	IN	IN	-	IN	-
2000-2FFF	IN	-	-	IN	-	IN	-	IN
3000-3FFF	IN	-	-	IN	-	IN	IN	-
4000-4FFF	IN	-	IN	-	IN	-	-	IN
5000-5FFF	IN	-	IN	-	IN	-	IN	-
6000-6FFF	IN	-	IN	-	-	IN	-	IN
7000-7FFF	IN	-	IN	-	-	IN	IN	-
8000-8FFF	-	IN	-	IN	IN	-	-	IN
9000-9FFF	-	IN	-	IN	IN	-	IN	-
A000-AFFF	-	IN	-	IN	-	IN	-	IN
B000-BFFF	-	IN	-	IN	-	IN	IN	-
C000-CFFF	-	IN	IN	-	IN	-	-	IN
D000-DFFF	-	IN	IN	-	IN	-	IN	-
E000-EFFF	-	IN	IN	-	-	IN	-	IN
F000-FFFF	NOT VALID-USED FOR SYSTEM ROM							

FOR ALL SUBSEQUENT REVISION MOTHERBOARDS

FOR ALL SUBSEQUENT REVISION PC BOARDS

ADDRESS (8K Block)	SW201 JUMPERS 8	7	6	5	4	3	2	1
0000-0FFF	IN	-	-	IN	-	IN	-	IN
1000-1FFF	IN	-	-	IN	-	IN	IN	-
2000-2FFF	IN	-	-	IN	IN	-	-	IN
3000-3FFF	IN	-	-	IN	IN	-	IN	-
4000-4FFF	IN	-	IN	-	-	IN	-	IN
5000-5FFF	IN	-	IN	-	-	IN	IN	-
6000-6FFF	IN	-	IN	-	IN	-	-	IN
7000-7FFF	IN	-	IN	-	IN	-	IN	-
8000-8FFF	-	IN	-	IN	-	IN	-	IN
9000-9FFF	-	IN	-	IN	-	IN	IN	-
A000-AFFF	-	IN	-	IN	IN	-	-	IN
B000-BFFF	-	IN	-	IN	IN	-	IN	-
C000-CFFF	-	IN	IN	-	-	IN	-	IN
D000-DFFF	-	IN	IN	-	-	IN	IN	-
E000-EFFF	-	IN	IN	-	IN	-	-	IN
F000-FFFF	NOT VALID-USED FOR SYSTEM ROM							

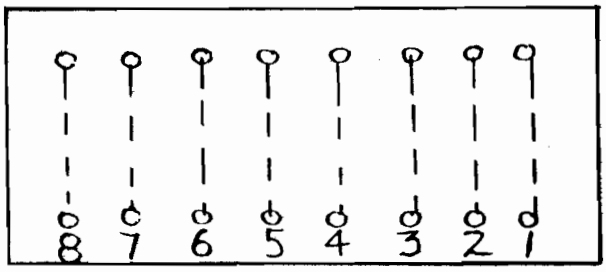

The following additional wire jumpers are required to be added to your Level A kit if your mother board is labled Revision B. Use the #30 gauge wire and stripping tool supplied with your Level A kit to make the connections on the bottom of the board. Strip the insulation about 3/16" and wrap the wire around the appropriate terminal and solder dress the wire as neatly as possible (i.e. square corners, etc.).

(1) Connect U205 pin 4 to U115 pin 8.
(2) Connect SW201 pin 14 to U115 pin 10.
(3) Connect U210 pin 8 to U115 pin 9.
(4) Connect U115 pin 11 to U115 pin 12.

These changes are reflected in your schematics.

WARRANTY: All components of this kit are warranteed for six months from the date of shipment. Defective components will be replaced free of charge if returned within six months with $1.00 each to cover testing and return postage. Return parts in a suitable package and ship insured to Netronics Research & Development Limited Route 202, New Milford, Connecticut 06776, attention: Service Department, with a letter explaining the defect. Any parts received damaged due to poor packaging will be returned. (i.e., DO NOT ship IC's in envelopes via the mail).

IN CASE OF DIFFICULTY: After having carefully checked your work and you still have difficulty getting your Explorer to work, the Factory Service Department will repair, fully test, and return your system for a flat fee (see below). This covers all parts, except parts destroyed by your negligence, (i.e., IC's installed backwards, broken, etc.), and return postage. Package the unit (less cabinet) carefully and return insured with a letter describing the difficulty.

If your system includes other level components, please see the instruction book for fees which apply to the further expanded systems. If any components are added which are not part of a Netronics kit you will be advised of the service charge prior to any work being done. If you have added any "Levels" to your system (using your own parts) it would be advisable to purchase the appropriate assembly manual, which will contain any factory modifications or updates, prior to returning your unit.

SCHEDULE OF IN WARRANTY FACTORY TROUBLE SHOOTING PRICES*

Level A	$12.50	Flat Fee
Hex Keypad/Display	7.00	" "
Level A & B	16.50	" "
Level A & B & D and/or E	20.00	" "
Power Supply	6.50	" "
ASCII Keyboard	7.00	" "
Video Display Board	9.50	" "

*Covers cost of all parts except those destroyed by the customer. These prices are not valid for levels added using parts not obtained from Netronics. If you have parts not supplied by Netronics, send your unit and ask for a quotation.

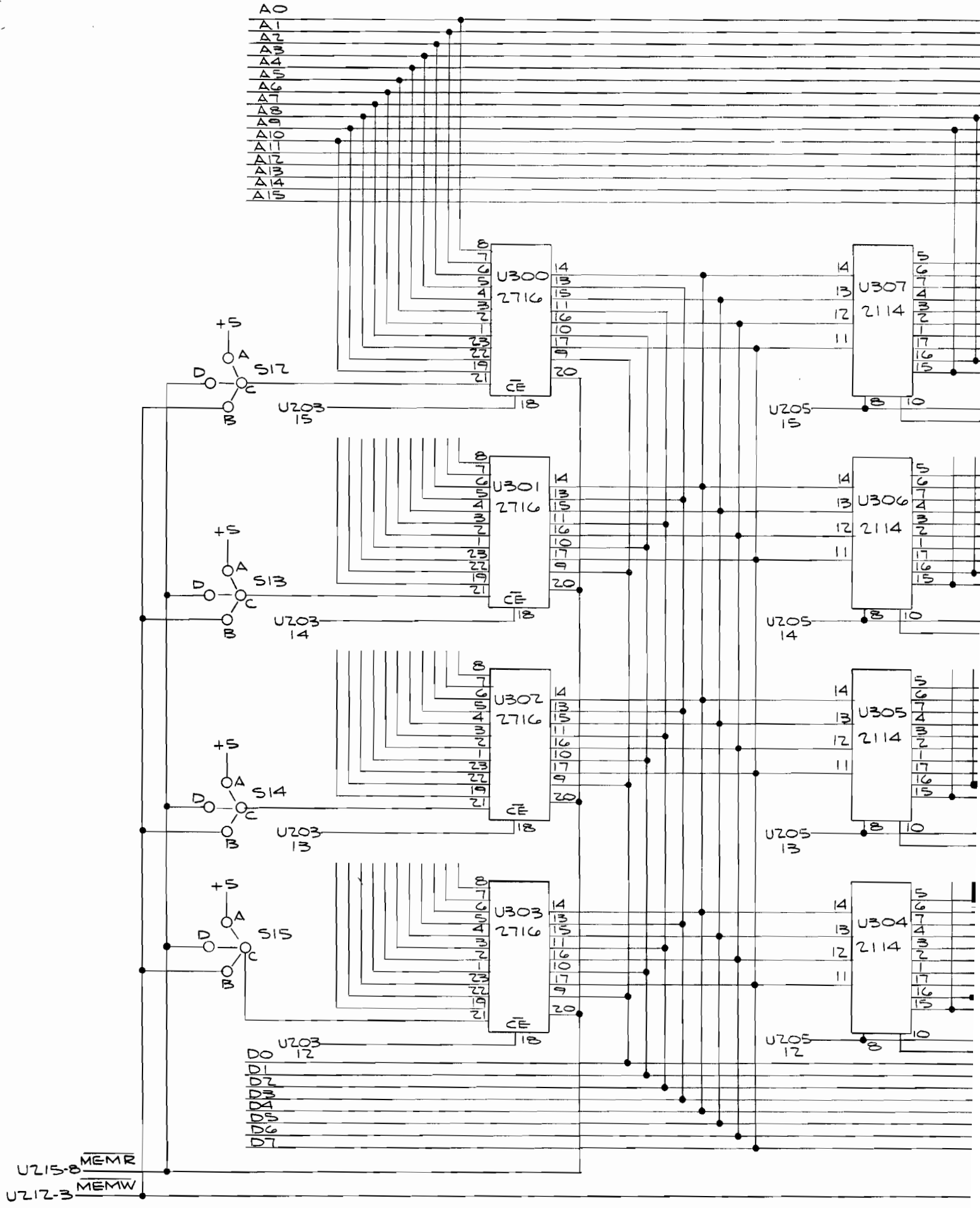
A0
A1
A2
A3
A4
A5
A6
A7
A8
A9
A10
A11
A12
A13
A14
A15
U300
2716
U301
2716
U302
2716
U303
2716
U307
2114
U306
2114
U305
2114
U304
2114
CE
+5
S12
S13
S14
S15
A
B
C
D
U203
15
U203
14
U203
13
U203
12
U205
15
U205
14
U205
13
U205
12
D0
D1
D2
D3
D4
D5
D6
D7
U215-8 MEMR
U212-3 MEMW

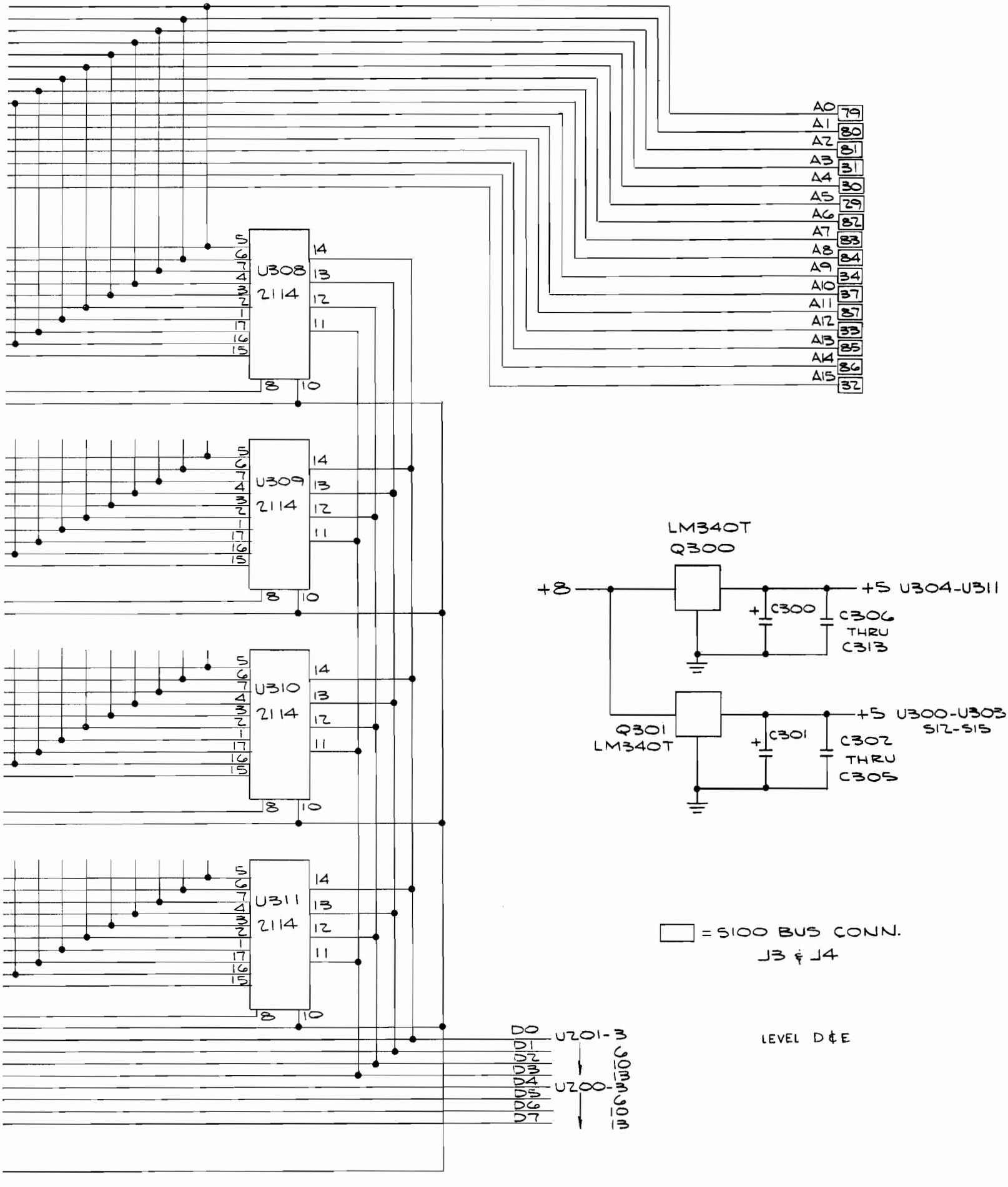

A0 79
A1 80
A2 81
A3 31
A4 30
A5 29
A6 82
A7 83
A8 84
A9 34
A10 37
A11 87
A12 33
A13 85
A14 86
A15 32
U308 2114
U309 2114
U310 2114
U311 2114
LM340T
Q300
+8
+5 U304-U311
C300
C306 THRU C313
Q301 LM340T
+5 U300-U303 S12-S15
C301
C302 THRU C305
= S100 BUS CONN. J3 & J4
D0 U201-3
D1 6
D2 10
D3 13
D4 U200-3
D5 6
D6 10
D7 13
LEVEL D & E

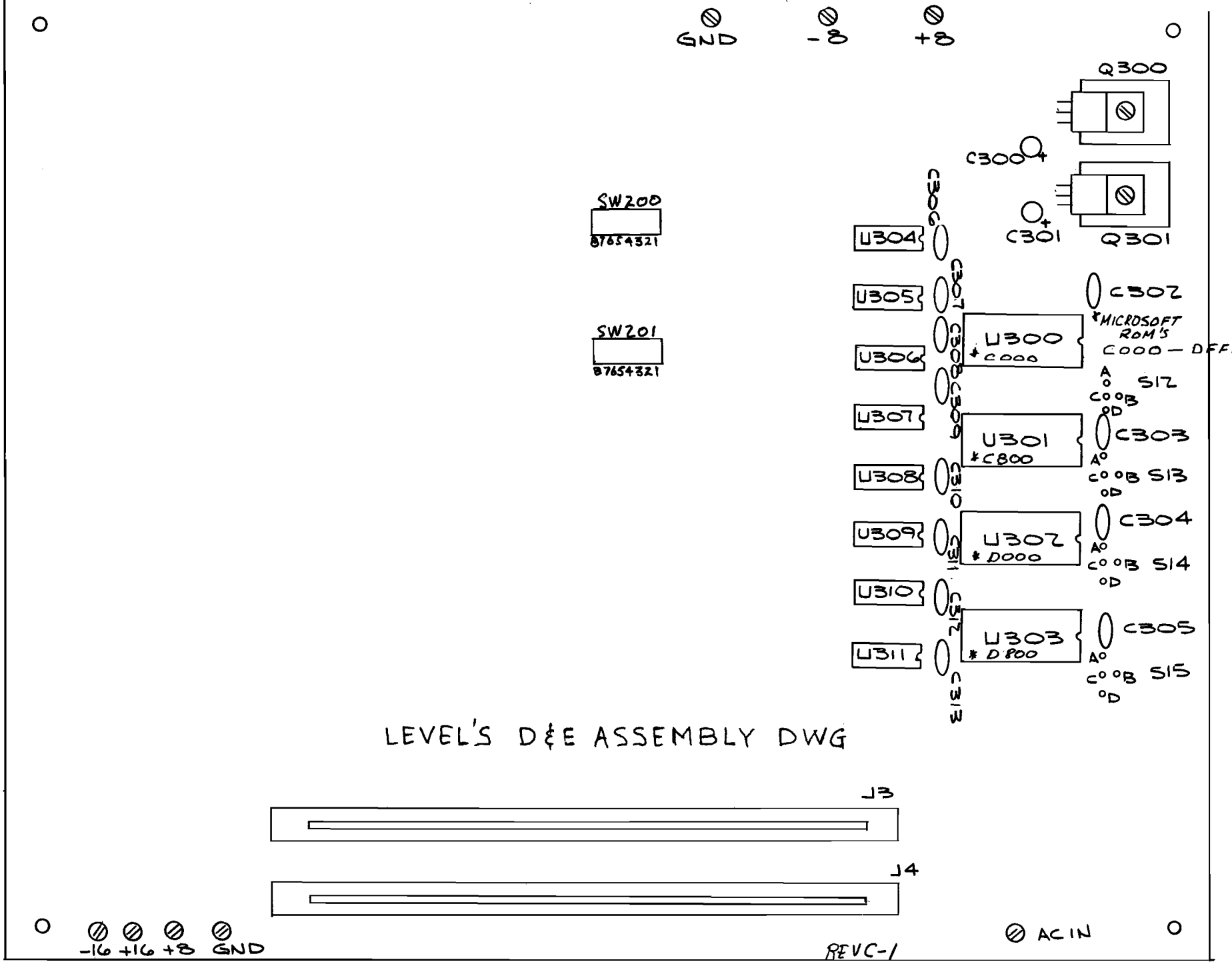
GND
-8
+8
Q300
C300
C301
Q301
SW200
87654321
SW201
87654321
U304
U305
U306
U307
U308
U309
U310
U311
C306
C307
C308
C309
C310
C311
C312
C313
U300
*C000
U301
*C800
U307
*D000
U303
*D800
C302
*MICROSOFT ROM'S
C000 — DFFF
A0 C00B 0D S12
C303
A0 C00B 0D S13
C304
A0 C00B 0D S14
C305
A0 C00B 0D S15
LEVEL'S D&E ASSEMBLY DWG
J3
J4
-16 +16 +8 GND
AC IN
REVC-1