Cromemco®

HD-20

Product Description Manual

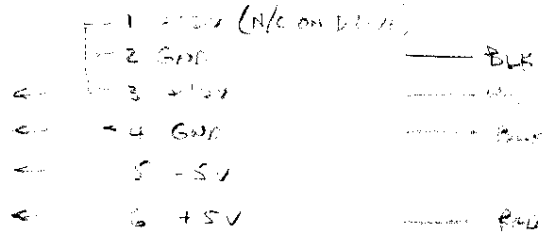

CROMEMCO, Inc.
280 Bernardo Avenue
Mountain View, CA. 94043

Part No. 023-6043

April 1983

Copyright © 1983
CROMEMCO, Inc.
All Rights Reserved

263-02410-001

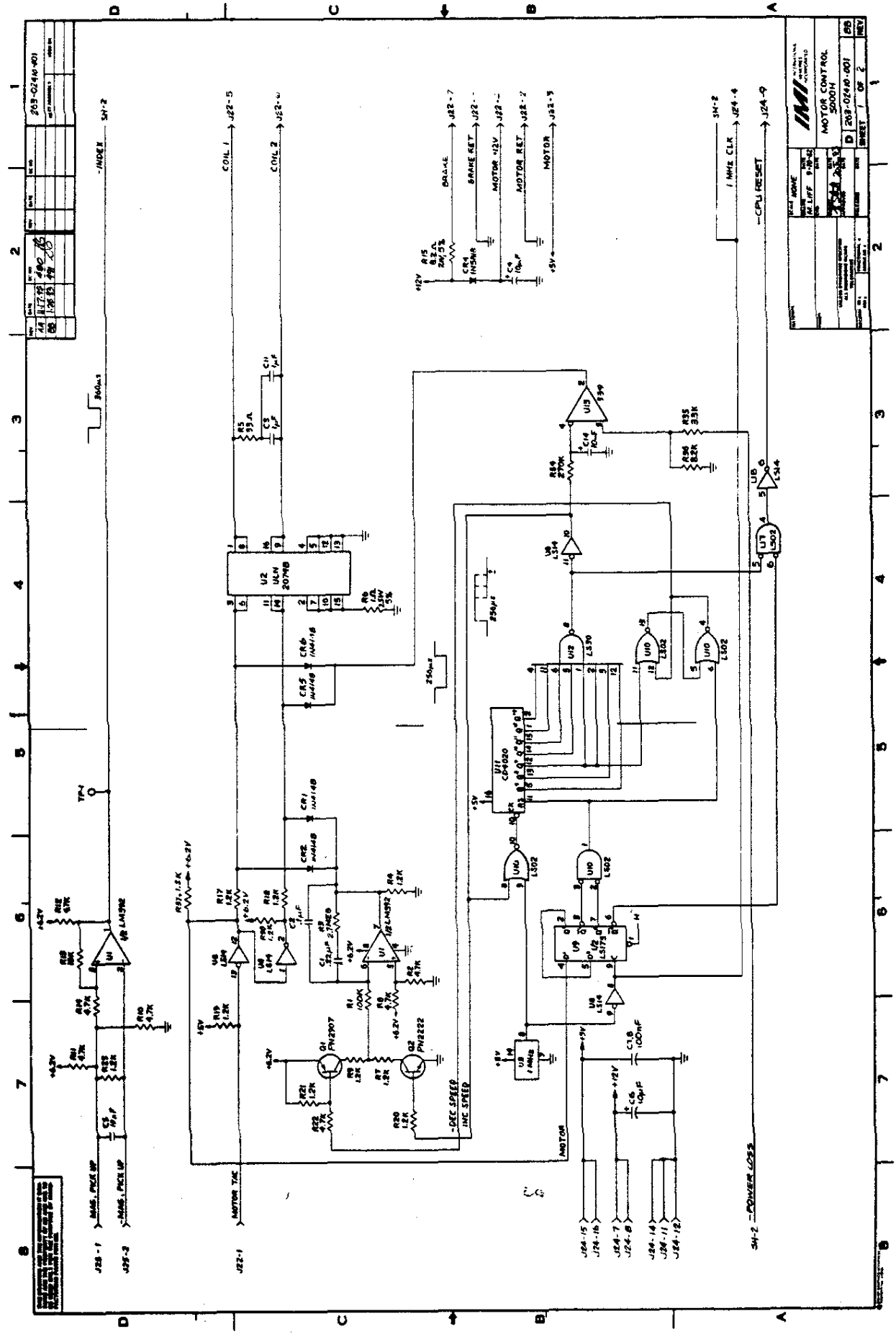

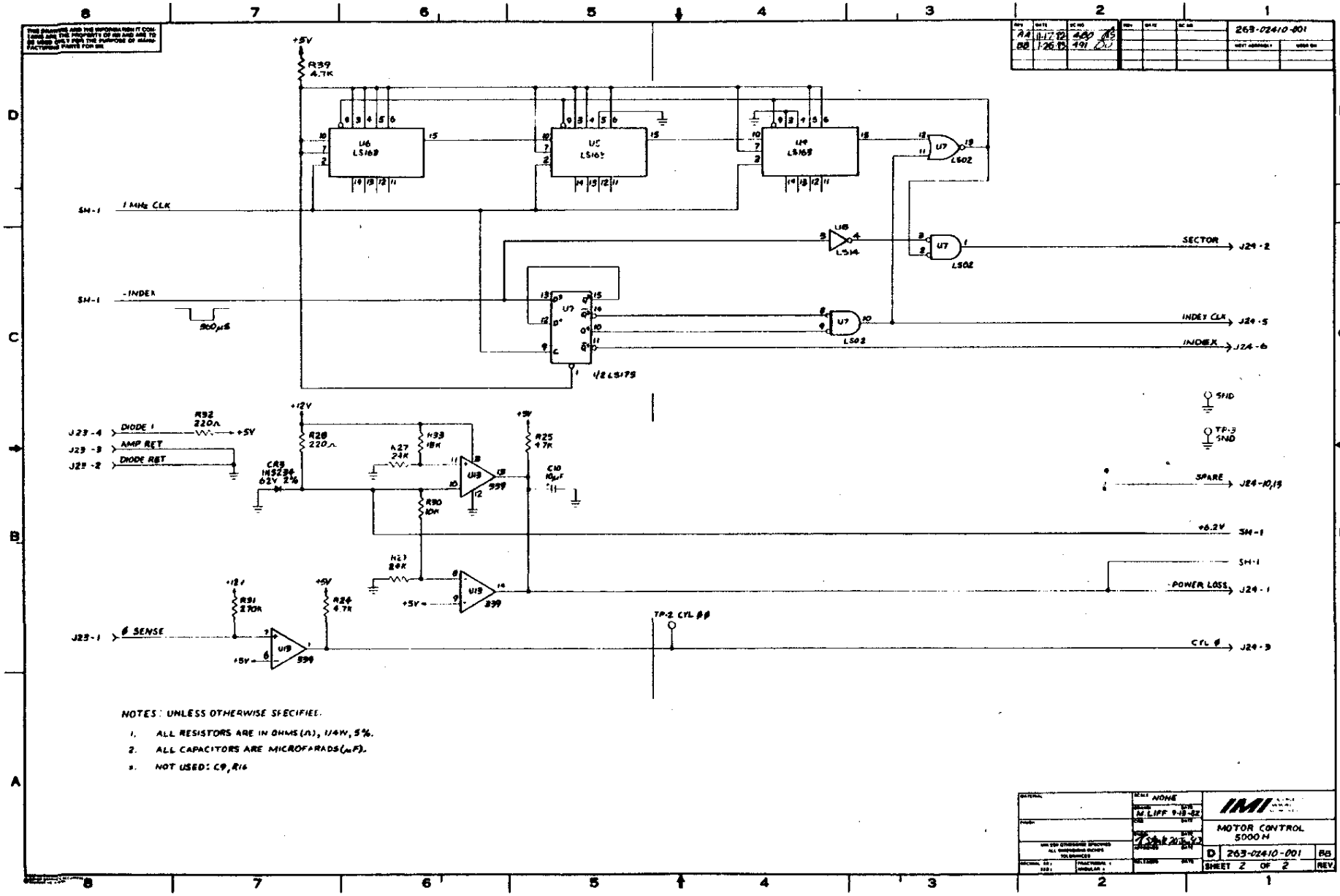

NOTES: UNLESS OTHERWISE SPECIFIED.

1. ALL RESISTORS ARE IN OHMS (Ω), 1/4W, 5%.
2. ALL CAPACITORS ARE MICROFARADS (µF).
3. NOT USED: C9, R16

REV	DATE	ECN NO
AA	11-17-82	480
BB	12-15-82	491

263-02410-001

MATERIAL	SCALE NONE	IMI
FINISH	DRAWN M. LIFF 9-18-82	MOTOR CONTROL 5000 H
UNLESS OTHERWISE SPECIFIED ALL DIMENSIONS ARE IN INCHES TOLERANCES	CHK	D 263-02410-001 BB
DECIMAL .XX ± .01 FRACTIONS ± 1/64 ANGULAR ±	APPROVED	SHEET 2 OF 2 REV.

263-02410-001

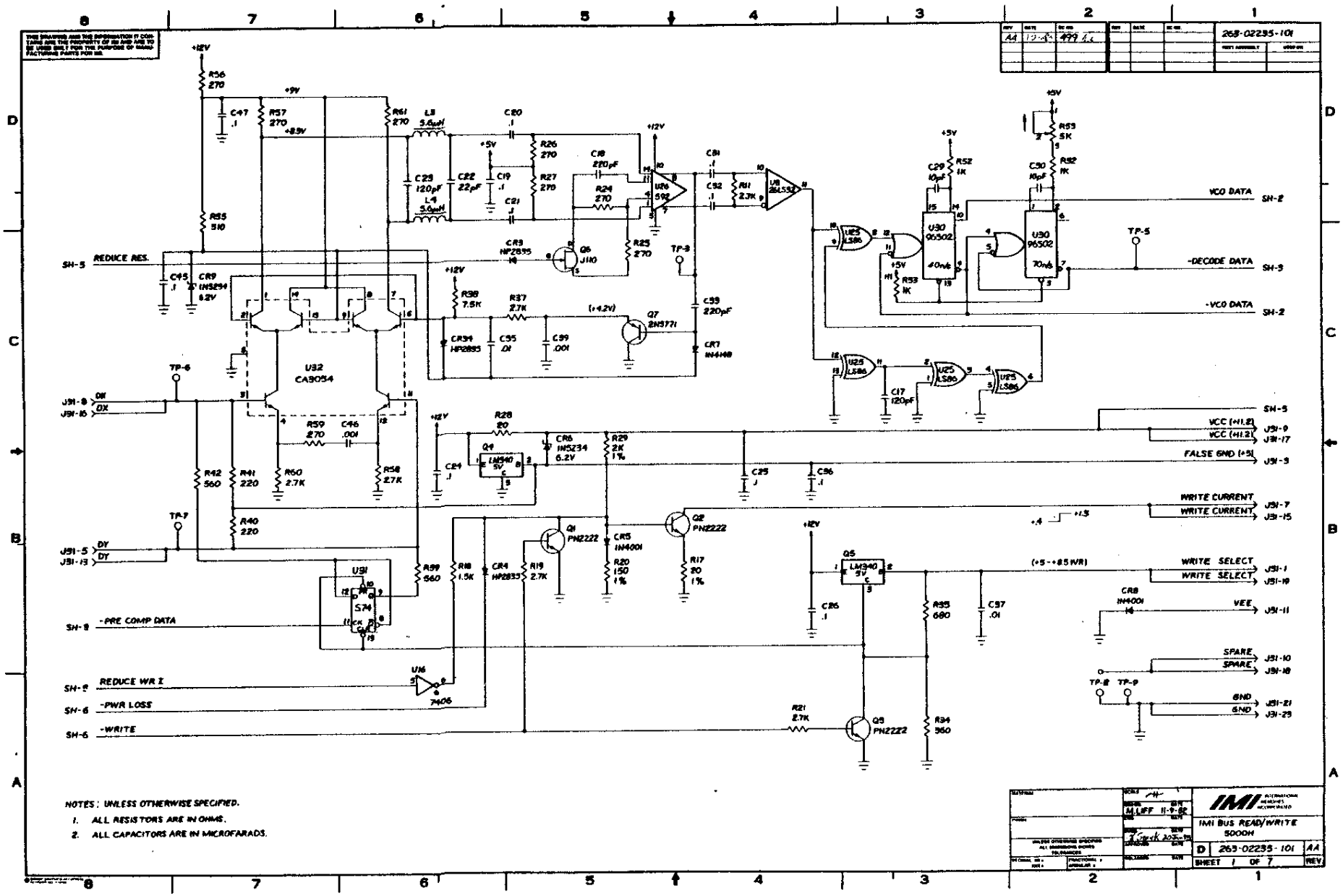

263-02235-101
REDUCE RES.
-PRE COMP DATA
REDUCE WR I
-PWR LOSS
-WRITE
VCO DATA
-DECODE DATA
-VCO DATA
VCC (+11.2)
FALSE GND (+5)
WRITE CURRENT
WRITE SELECT
VEE
SPARE
GND
U32 CA3054
U30 96502
U31 S74
U16 7406
Q1 PN2222
Q2 PN2222
Q3 PN2222
Q4 LM340 5V
Q5 LM340 5V
Q6 J110
Q7 2N3771
U8 26LS32
U25 LS86
U26 592
CR3 HP2835
CR4 HP2835
CR5 1N4001
CR6 1N5234 6.2V
CR7 1N4148
CR8 1N4001
CR9 1N5234 6.2V
CR34 HP2835
+12V
+9V
+8.5V
+5V
+4.2V
+1.3
+4
+5-+8.5WR
TP-3
TP-5
TP-6
TP-7
TP-8
TP-9
J31-8 DX
J31-16 DX
J31-5 DY
J31-13 DY
SH-5
SH-3
SH-2
SH-6
SH-9
SH-8
SH-6
SH-6
NOTES: UNLESS OTHERWISE SPECIFIED.
1. ALL RESISTORS ARE IN OHMS.
2. ALL CAPACITORS ARE IN MICROFARADS.
IMI BUS READ/WRITE 5000H
D 263-02235-101 AA
SHEET 1 OF 7
REV

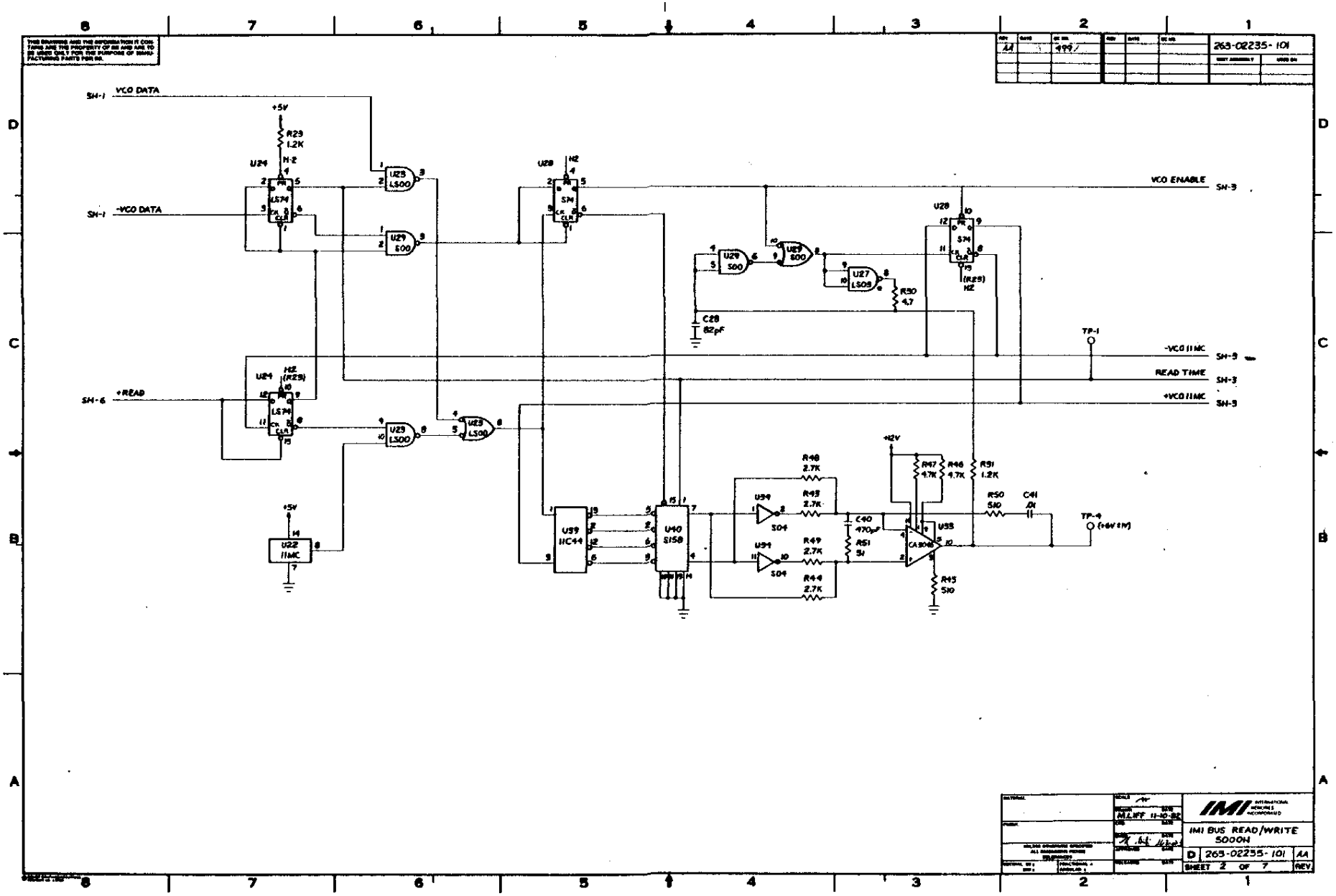

THIS DRAWING AND THE INFORMATION IT CONTAINS ARE THE PROPERTY OF IMI AND ARE TO BE USED ONLY FOR THE PURPOSE OF MANUFACTURING PARTS FOR IMI.
AA
499
263-02235-101
SH-1 VCO DATA
SH-1 -VCO DATA
SH-6 +READ
+5V
R23 1.2K
U24
LS74
U25 LS00
U29 S00
U28
S74
VCO ENABLE SH-3
U27 LS05
R30 4.7
C28 82pF
TP-1
-VCO 11MC SH-3
READ TIME SH-3
+VCO 11MC SH-3
U22 11MC
U39 11C44
U40 S158
U34 S04
R48 2.7K
R43 2.7K
R49 2.7K
R44 2.7K
C40 470pF
R51 51
+12V
R47 4.7K
R46 4.7K
R51 1.2K
U33 CA3046
R45 510
R50 510
C41 .01
TP-4 (+6V ±1V)
M.LIFF 11-10-82
IMI INTERNATIONAL MEMORIES INCORPORATED
IMI BUS READ/WRITE 5000H
D 263-02235-101 AA
SHEET 2 OF 7
REV.

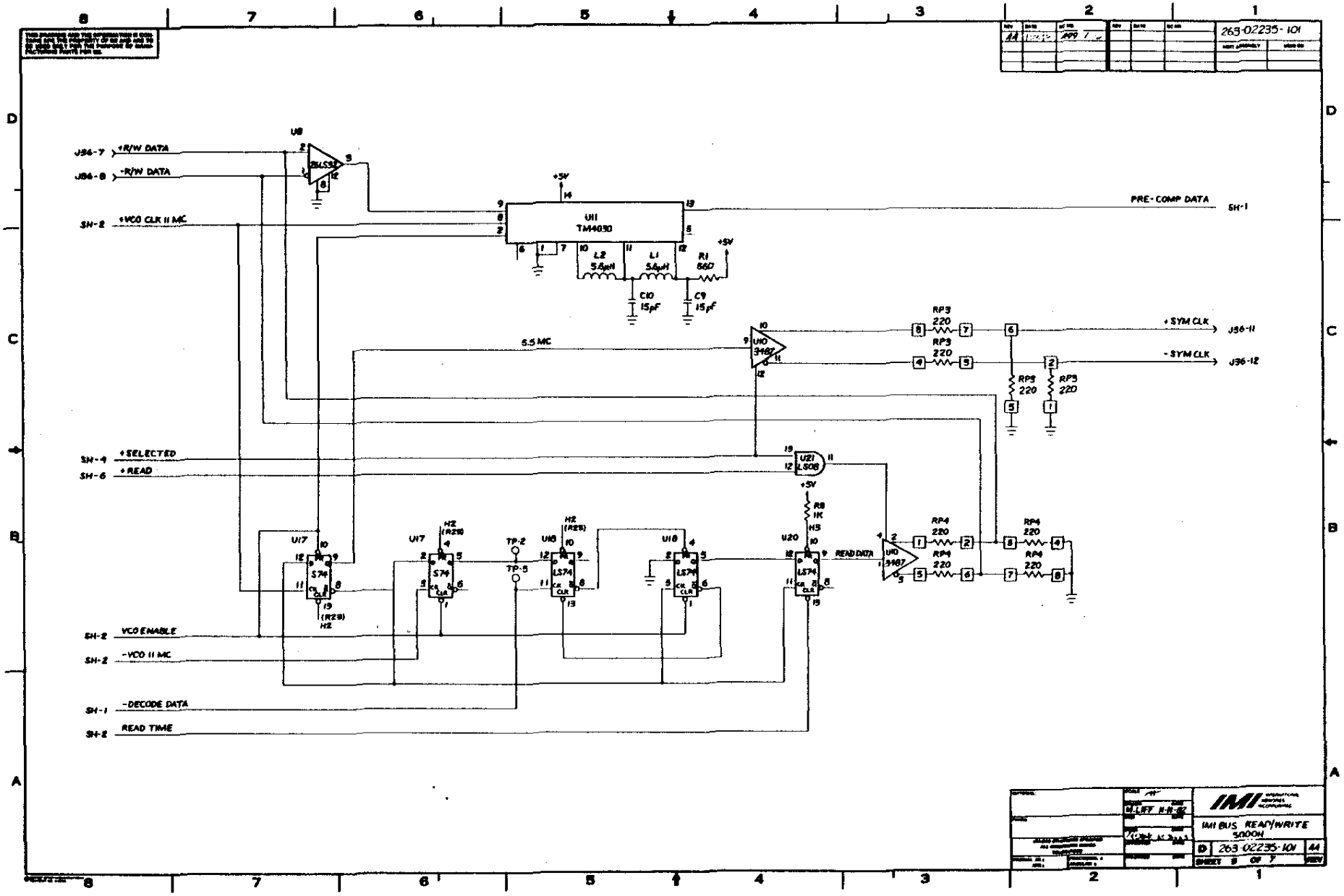
263-02235-101
J36-7 +R/W DATA
J36-8 -R/W DATA
SH-2 +VCO CLK II MC
PRE-COMP DATA
SH-1
5.5 MC
+SYM CLK
J36-11
-SYM CLK
J36-12
SH-4 +SELECTED
SH-6 +READ
SH-2 VCO ENABLE
SH-2 -VCO II MC
SH-1 -DECODE DATA
SH-2 READ TIME
READ DATA
TP-2
TP-5
IMI BUS READ/WRITE 5000H
263-02235-101
SHEET 9 OF 9

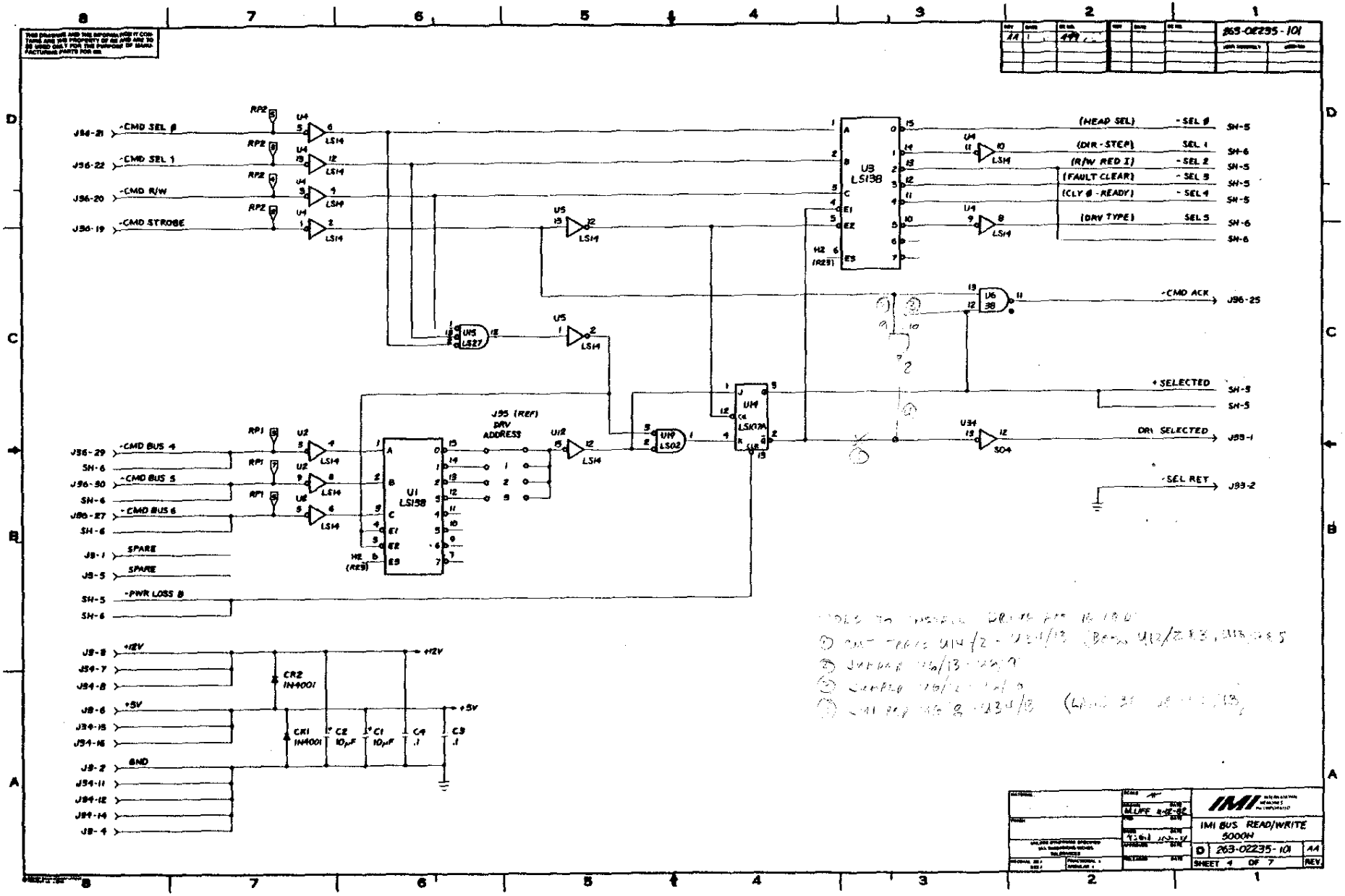
263-02235-101
J56-21 -CMD SEL 0
J56-22 -CMD SEL 1
J56-20 -CMD R/W
J56-19 -CMD STROBE
U8 LS138
(HEAD SEL) -SEL 0
(DIR-STEP) SEL 1
(R/W RED I) -SEL 2
(FAULT CLEAR) -SEL 3
(CLY 0 - READY) -SEL 4
(DRV TYPE) SEL 5
-CMD ACK J56-25
+SELECTED SH-5
DRV SELECTED J55-1
-SEL RET J53-2
J55 (REF) DRV ADDRESS
U1 LS138
J56-29 -CMD BUS 4
J56-30 -CMD BUS 5
J56-27 -CMD BUS 6
J8-1 SPARE
J8-5 SPARE
SH-5 -PWR LOSS B
J8-3 +12V
J54-7
J54-8
J8-6 +5V
J54-15
J54-16
J8-2 GND
J54-11
J54-12
J54-14
J8-4
CR2 IN4001
CR1 IN4001
C2 10µF
C1 10µF
C4 .1
C3 .1
+12V
+5V
IMI BUS READ/WRITE 5000H
263-02235-101
SHEET 4 OF 7

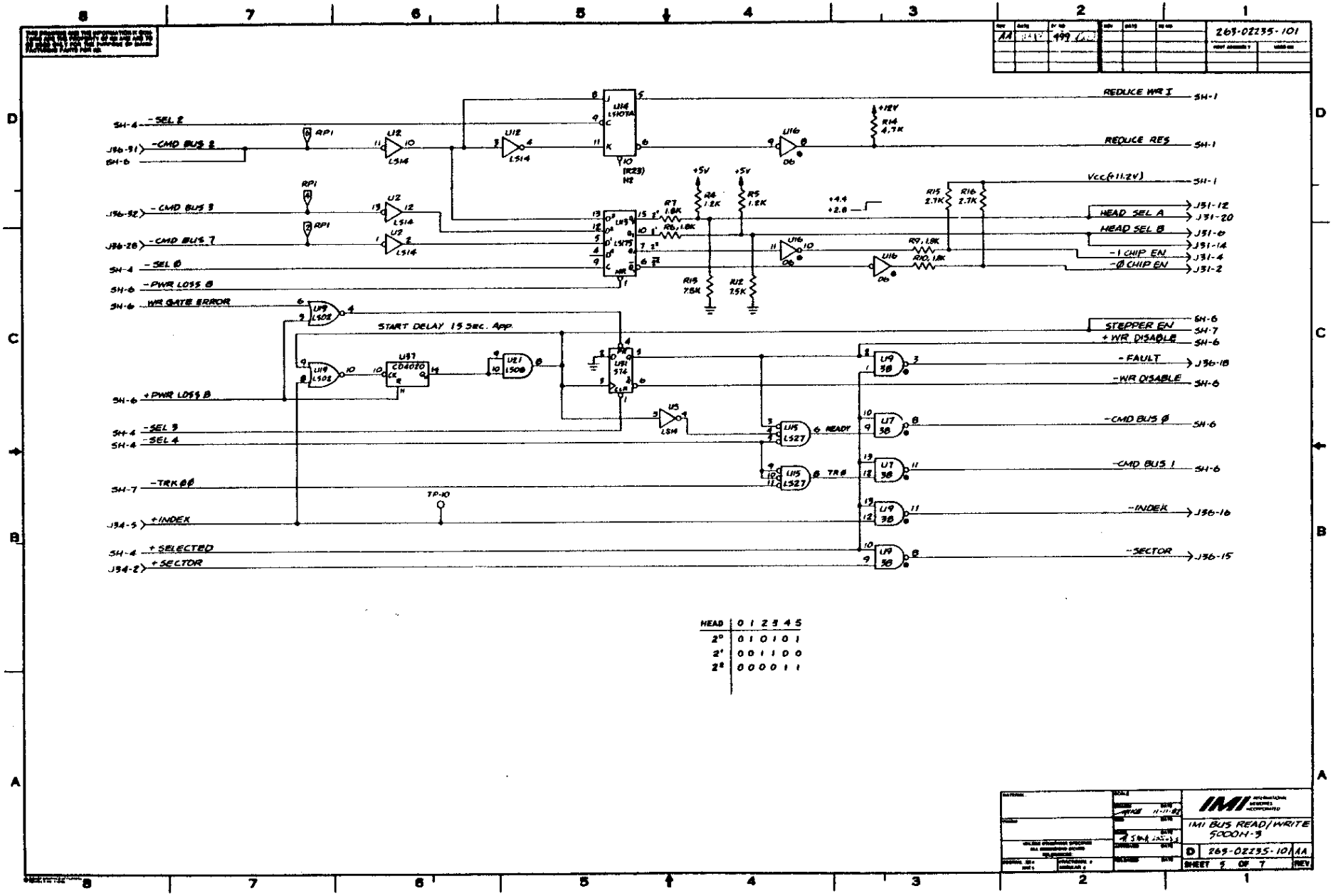
269-02235-101
REDUCE WR I
REDUCE RES
Vcc(+11.2V)
HEAD SEL A
HEAD SEL B
-1 CHIP EN
-0 CHIP EN
STEPPER EN
+WR DISABLE
-FAULT
-WR DISABLE
-CMD BUS 0
-CMD BUS 1
-INDEX
-SECTOR
-SEL 2
-CMD BUS 2
-CMD BUS 3
-CMD BUS 7
-SEL 0
-PWR LOSS 0
WR GATE ERROR
START DELAY 15 Sec. App.
+PWR LOSS 0
-SEL 3
-SEL 4
-TRK 00
+INDEX
+SELECTED
+SECTOR
TP-10
+5V
+12V
+14.4
+2.0
R4 4.7K
R5 1.2K
R6 1.8K
R7 1.8K
R9 1.8K
R10 1.8K
R12 7.5K
R15 2.7K
R16 2.7K
RP1
U2 LS14
U5 LS14
U8 LS74
U9 LS02
U9 30
U11 LS08
U16 LS04
U17 CD4020
U21 LS08
U5 LS14
U7 30
U15 LS27
6 READY
6 TR0
HEAD 0 1 2 3 4 5
2^0 0 1 0 1 0 1
2^1 0 0 1 1 0 0
2^2 0 0 0 0 1 1
IMI BUS READ/WRITE 5000H-3
D 269-02235-101 AA
SHEET 1 OF 7

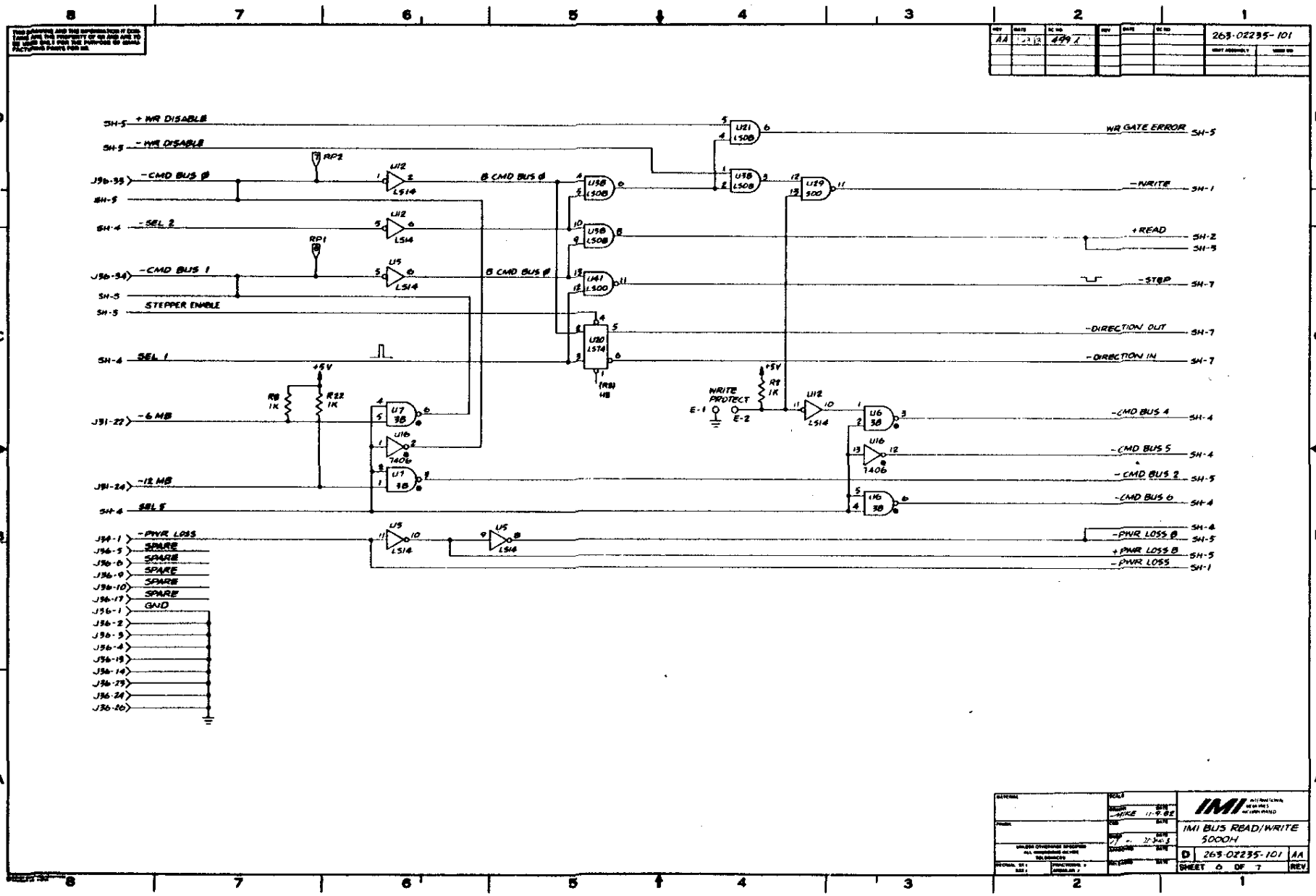
263-02235-101
AA
+WR DISABLE
-WR DISABLE
-CMD BUS 0
-SEL 2
-CMD BUS 1
STEPPER ENABLE
SEL 1
-6 MB
-12 MB
SEL 5
-PWR LOSS
SPARE
SPARE
SPARE
SPARE
GND
B CMD BUS 0
B CMD BUS 0
WRITE PROTECT
WR GATE ERROR
-WRITE
+READ
-STEP
-DIRECTION OUT
-DIRECTION IN
-CMD BUS 4
-CMD BUS 5
-CMD BUS 2
-CMD BUS 6
-PWR LOSS B
+PWR LOSS B
-PWR LOSS
IMI BUS READ/WRITE
5000H
263-02235-101
AA
SHEET 6 OF 7

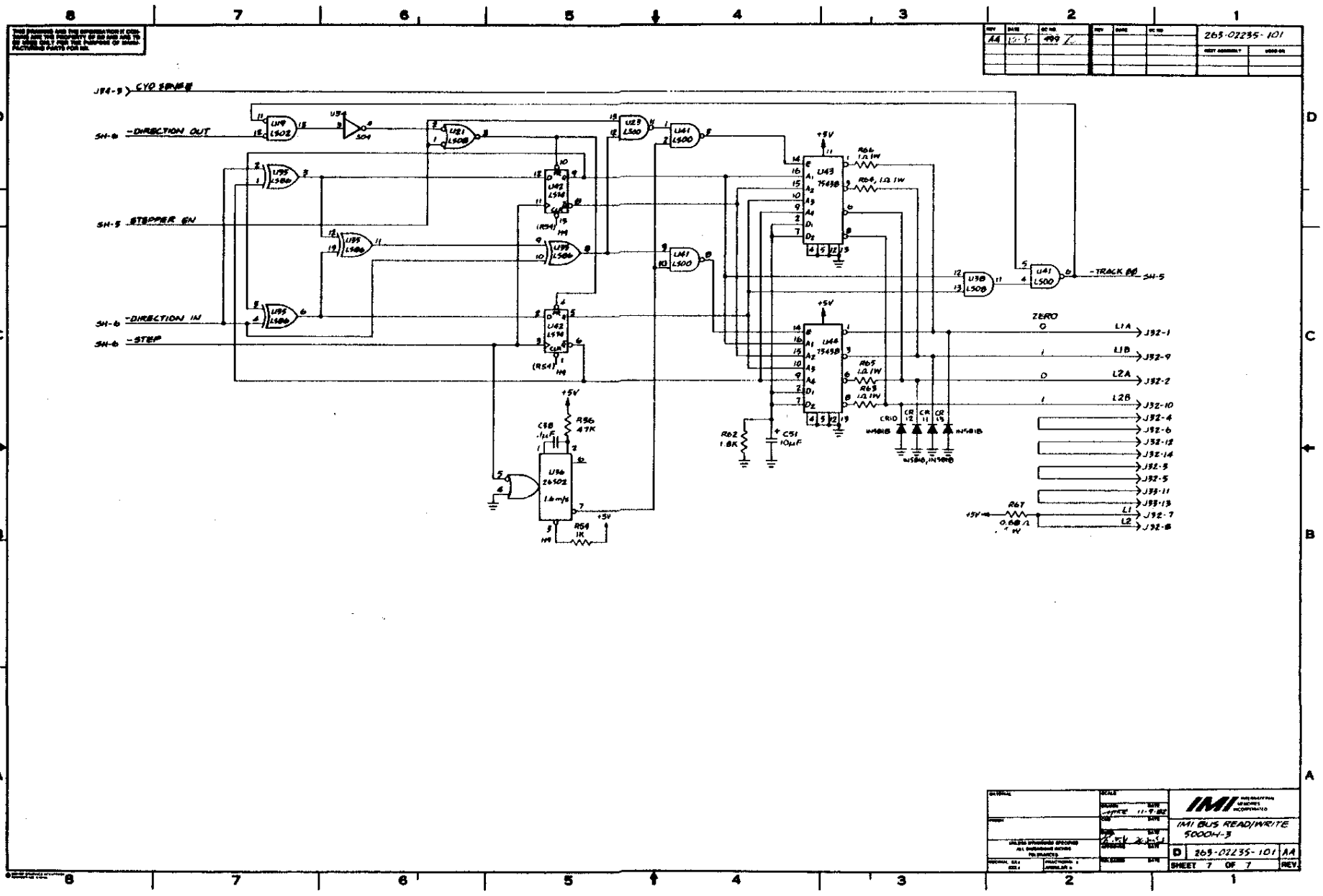

263-02235-101
J34-3 CYD SENSE
SH-6 -DIRECTION OUT
SH-5 STEPPER EN
SH-6 -DIRECTION IN
SH-6 -STEP
-TRACK 00 SH-5
ZERO
L1A J32-1
L1B J32-9
L2A J32-2
L2B J32-10
J32-4
J32-6
J32-12
J32-14
J32-3
J32-5
J32-11
J32-13
L1 J32-7
L2 J32-8
U19 LS02
U34 S04
U21 LS08
U23 LS00
U41 LS00
U35 LS86
U42 LS74
U43 7543B
U44 7543B
U38 LS08
U36 26S02
R66 1Ω 1W
R64 1Ω 1W
R65 1Ω 1W
R63 1Ω 1W
R62 1.8K
C51 10μF
R56 47K
C38 .1μF
R54 1K
R67 0.68Ω
CR10 CR12 CR11 CR13
IN581B
+5V
IMI
IMI BUS READ/WRITE
5000H-3
D 263-02235-101 AA
SHEET 7 OF 7
REV.

LIMITED WARRANTY

Cromemco, Inc. ("Cromemco") warrants this product against defects in material and workmanship to the original purchaser for ninety (90) days from the date of purchase, subject to the following terms and conditions.

What Is Covered By This Warranty:

During the ninety (90) day warranty period Cromemco will, at its option, repair or replace this Cromemco product or repair or replace with new or used parts any parts or components, manufactured by Cromemco, which prove to be defective, provided the product is returned to an Authorized Cromemco Dealer as set forth below.

How To Obtain Warranty Service:

You should immediately notify IN WRITING your Authorized Cromemco Dealer or Cromemco of problems encountered during the warranty period. In order to obtain warranty service, first obtain a return authorization number by contacting the Authorized Cromemco Dealer from whom you purchased the product. Then attach to the product:

1. Your name, address and telephone number,
2. the return authorization number,
3. a description of the problem, and
4. proof of the date of retail purchase.

Ship or otherwise return the product, transportation and insurance costs prepaid, to the Authorized Cromemco Dealer. If you are unable to receive warranty repair from the Authorized Cromemco Dealer from whom you purchased the product, you should contact Cromemco Customer Support at: Cromemco, Inc., 280 Bernardo Ave., Mountain View, Ca. 94043.

What Is Not Covered By This Warranty:

Cromemco does not warrant any products, components or parts not manufactured by Cromemco.

This warranty does not apply if the product has been damaged by accident, abuse, misuse, modification or misapplication; by damage during shipment; or by improper service. This product is not warranted to operate satisfactorily with peripherals or products not manufactured by Cromemco. Transportation and insurance charges incurred in transporting the product to and from the Authorized Cromemco Dealer or Cromemco are not covered by this Warranty.

Exclusion of Liability, Damages, and Other Warranties:

THIS WARRANTY IS IN LIEU OF ALL OTHER WARRANTIES, WHETHER ORAL OR WRITTEN, EXPRESS OR IMPLIED. ANY IMPLIED WARRANTIES, INCLUDING IMPLIED WARRANTIES OF MERCHANTABILITY AND FITNESS FOR A PARTICULAR PURPOSE, ARE LIMITED IN DURATION TO NINETY (90) DAYS FROM THE DATE OF PURCHASE OF THIS PRODUCT. IF THIS PRODUCT IS NOT IN GOOD WORKING ORDER AS WARRANTED ABOVE, YOUR SOLE REMEDY SHALL BE REPAIR OR REPLACEMENT AS PROVIDED ABOVE. CROMEMCO SHALL NOT BE LIABLE FOR INCIDENTAL AND/OR CONSEQUENTIAL DAMAGES FOR THE BREACH OF ANY EXPRESS OR IMPLIED WARRANTY, INCLUDING DAMAGE TO PROPERTY AND, TO THE EXTENT PERMITTED BY LAW, DAMAGES FOR PERSONAL INJURY, EVEN IF CROMEMCO HAS BEEN ADVISED OF THE POSSIBILITY OF SUCH DAMAGES. THE AGENTS, DEALERS, AND EMPLOYEES OF CROMEMCO ARE NOT AUTHORIZED TO MAKE MODIFICATIONS TO THIS WARRANTY, OR ADDITIONAL WARRANTIES BINDING ON CROMEMCO ABOUT OR FOR PRODUCTS SOLD OR LICENSED BY CROMEMCO. ACCORDINGLY, ADDITIONAL STATEMENTS WHETHER ORAL OR WRITTEN EXCEPT SIGNED WRITTEN STATEMENTS FROM AN OFFICER OF CROMEMCO DO NOT CONSTITUTE WARRANTIES AND SHOULD NOT BE RELIED UPON. SOFTWARE, TECHNICAL INFORMATION AND FIRMWARE ARE LICENSED ONLY BY A SEPARATE AGREEMENT ON AN "AS IS" BASIS.

Limitation on Statute of Limitation and Transferability:

This warranty and the statute of limitations shall run concurrently with any acceptance period. This warranty is not transferable. No suit, litigation, or action shall be brought based on the alleged breach of this warranty or implied warranties more than one year after the date of purchase in those jurisdictions allowing such a limitation, otherwise no such action shall be brought more than one year after the expiration of this warranty.

Other Important Provisions:

Some states do not allow the exclusion or limitation of incidental or consequential damages or limitations on how long an implied warranty lasts, so the above limitation or exclusion may not apply to you. This warranty shall not be applicable to the extent that any provision of this warranty is prohibited by any federal, state or municipal law which cannot be preempted. This warranty gives you specific legal rights, and you may also have other rights which vary from state to state.

7/82

CROMEMCO

HD-20

Installation Procedure

CROMEMCO, INC.
280 Bernardo Avenue
Mountain View, CA 94043

Part No. 023-6042

March 1983

Copyright © 1983
CROMEMCO, INC.
All Rights Reserved

This manual was produced using a Cromemco System Three computer with a Cromemco HDD-22 Hard Disk Storage System running under the Cromemco Cromix™ Operating System. The text was edited with the Cromemco Cromix Screen *Editor. The edited text was proofread by the* Cromemco SpellMaster™ Program and formatted by the Cromemco Word Processing System Formatter II. Camera-ready copy was printed on a Cromemco 3355B printer.

HD-20 INSTALLATION PROCEDURE

THIS PROCEDURE IS ONLY TO BE PERFORMED BY AN AUTHORIZED CROMEMCO DEALER OR REPAIR FACILITY.

BEFORE PROCEEDING, MAKE SURE THAT YOU ARE USING THE CDOS OPERATING SYSTEM VERSION 2.56 OR HIGHER, THE CROMIX OPERATING SYSTEM VERSION 11.16 OR HIGHER, OR THE 68000 CROMIX OPERATING SYSTEM VERSION 20.14 OR HIGHER.

SEVERE DAMAGE TO THE HD-20 DRIVE MAY RESULT IF YOU USE OLDER VERSIONS OF THE OPERATING SYSTEM. THIS DAMAGE IS NOT COVERED BY THE CROMEMCO LIMITED WARRANTY.

The HD-20 is designed to operate in a Cromemco System Two or Three. Prior to installation, verify that the drive is set up to respond as drive 0. The blue jumper should be on the left set of the drive select pins (as viewed form the rear, see Figure 1).

Signal Cable Connection

The 36 conductor signal cable is connected between the HD-20 and the WDI-II. The first step in the installation of the HD-20 is the connection of the signal cable to the HD-20. This must be done before the drive is mounted in the system. Looking at the rear of the drive with the heat sink on the left, the cable is connected with the index strip to the right. See Figure 2.

You are now ready to mount the HD-20. Refer to section of the following instructions which is appropriate to your system.

System Two and Z2-D Mounting Procedure

The HD-20 mounts just below the two 5" floppy disk drives in the System Two. Each of the two floppy disk drives is held in its metal frame by means of 6-32 screws. Remove the two bottom retaining screws from each drive and then reinstall them so that the mounting plate for the HD-20 is attached to the bottom of the two floppy disk support housings. Refer to Figure 3.

Plug the HD-20 power cord into the plug on the HD-20. This connector is designed so that it can only be connected one way. Now slide the HD-20 onto the HD-20 mounting plate. Refer to Figure 4.

Power Cable Connection

To install the power cable it is necessary to remove the top cover and the rear panel from the System Two.

Route the HD-20 power cord along the same path as the floppy disk power cord and connect to the power supply as indicated below. This cable consists of six color coded wires as follows:

Red	+ 8 volts d.c. (3 amp line fuse)
Yellow	-16 volts d.c.
Orange	+16 volts d.c.
Black	d.c. common
Brown	a.c. 115 volt tap on transformer
White	a.c. Neutral tap on transformer

With the exception of the brown wire this color code is consistent with the color coding used for the System Two power supply.

Red Wire: The red (+8v d.c.) wire should be connected to the + terminal on either of the 130,000 mfd capacitors. This terminal will already have one or more red wires connected to it.

Black Wire: The black (d.c. common) wire should be connected to one of the 29000 mfd capacitor terminals where a black wire is already connected.

In connecting the four remaining wires note that the connector on the end of each wire contains a male adaptor. Once the connector is plugged onto a post, the wire that was originally plugged to that post can be plugged onto the mail adaptor.

Yellow Wire: The yellow (-16v d.c.) wire should be connected to the -16 volt fuse holder on the side with the yellow wire going to the S-100 motherboard.

Orange Wire: The orange (+16v d.c.) wire should be connected to the +16 volt fuse holder on the side with the orange wire going to the S-100 motherboard.

White Wire: The white (a.c. neutral) wire should be attached and soldered to the main power transformer primary pin 5 on 8 tap transformers. (Use pin 4 on older 6 tap transformers.) A black wire from the system fan and a white transformer wire are already attached to this point.

Brown Wire: The brown (a.c. 115v) wire should be attached and soldered to the main power transformer primary pin 7 on 8 tap transformers. (Use pin 6 on older 6 tap transformers.) A black wire from the system fan is already attached to this point.

This completes the System Two wiring of the power harness for the HD-20.

Connect the signal cable coming from the HD-20 to the WDI-II being careful that the cable marking stripe is positioned in the manner indicated on the WDI-II.

System Three Mounting Procedure

The HD-20 mounts in the area where the C and D disk drive is normally located. The HD-20 cannot be installed in a system with two disk drives (four slots - A, B, C, and D). To mount the drive and power cable it is necessary to remove the top cover and the rear panel from the System Three.

Orient the HD-20 with the power supply cooling fin up and the rear of the drive (part where the signal cable is connected) facing you. See Figure 5.

With the signal cable routed along the right side of the drive, slide the drive into the mounting area far enough so that the HD-20 power plug can be connected through the top opening in the mounting frame. Now, slide the HD-20 forward until it is approximately 1 1/4" from the front of the mounting frame and attach the drive at that point by means of two screws as shown in Figure 5. The signal cable should be routed to the card cage following the same path used by the floppy disk signal cable.

Power Cable Connection

To install the power cable it is necessary to remove the top cover and the rear panel from the System Three.

Route the HD-20 power cord between the heat sink fins to the rear of the system and connect to the power supply as indicated below. This cable consists of six color coded wires as follows:

Red	+ 8 volts d.c. (3 amp line fuse)
Yellow	-16 volts d.c.
Orange	+16 volts d.c.
Black	d.c. common
Brown	a.c. 115 volt tap on transformer
White	a.c. Neutral tap on transformer

With the exception of the brown wire this color code is consistent with the color coding used for the System Two power supply. Refer to Figure 6.

Red Wire: The red (+8v d.c.) wire should be connected to the + terminal on the very large capacitor which is mounted vertically on the back panel. This terminal will already have several red wires connected to it.

Black Wire: The black (d.c. common) wire should be connected to one of the terminals of the smaller capacitors to which a black wire is currently attached. The other terminal of the capacitor will have either an orange or a yellow wire attached.

In connecting the four remaining wires note that the connector on the end of each wire contains a male adaptor. Once the connector is plugged onto a post, the wire that was originally plugged to that post can be plugged onto the mail adaptor.

Yellow Wire: The yellow (-16v d.c.) wire should be connected to the -16 volt fuse holder on the side with the yellow wire going to the S-100 motherboard.

Orange Wire: The orange (+16v d.c.) wire should be connected to the +16 volt fuse holder on the side with the orange wire going to the S-100 motherboard.

White Wire: The white (a.c. neutral) wire should be attached and soldered to the main power transformer primary pin 5 on 8 tap transformers. (Use pin 4 on older 6 tap transformers.) A black wire from the system fan and a white transformer wire are already attached to this point.

Brown Wire: The brown (a.c. 115v) wire should be attached and soldered to the main power transformer primary pin 7 on 8 tap transformers. (Use pin 6 on older 6 tap transformers.) A black wire from the system fan is already attached to this point.

This completes the System Three wiring of the power harness for the HD-20.

Connect the signal cable coming from the HD-20 to the WDI-II being careful that the cable marking stripe is positioned in the manner indicated on the WDI-II.

REVISIONS				
LTR	DESCRIPTION	DRAFTSMAN	DATE	APPROVAL

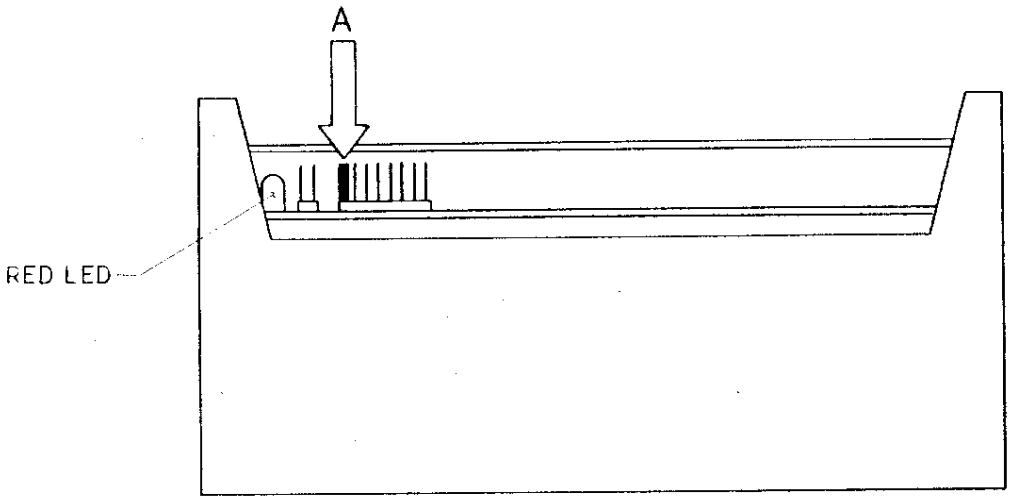

DISK DRIVE END VIEW

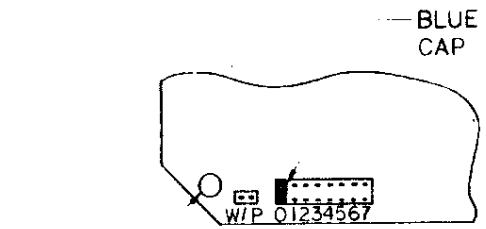

VIEW A

TOP-SIDE PCB NOT SHOWN FOR DRAWING CLARITY

INSTALLATION DRAWING

ITEM	PART NO.	DESCRIPTION	MANUFACTURER

MATERIAL	APPROVALS		DATE
	DESIGNER		
FINISH	DRAFTSMAN	Cong Ro	2.25.82
	CHECKER		

TITLE: UNIT CONFIGURATION HD-20

Cromemco incorporated

UNLESS OTHERWISE SPECIFIED DIMENSIONS ARE IN INCHES
TOLERANCES ARE:
FRACTIONS DECIMALS ANGLES
± — .XX ± — ± —
.XXX ± —

SIZE	PRODUCT	DWG. TYPE	ID NUMBER	REV
B				—

SCALE | SHEET | OF

Fig.1

REVISIONS				
LTR	DESCRIPTION	DRAFTSMAN	DATE	APPROVAL

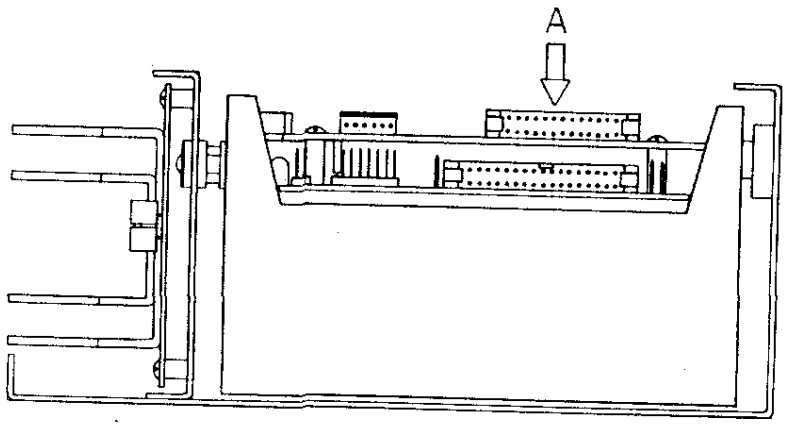

DISK DRIVE END VIEW

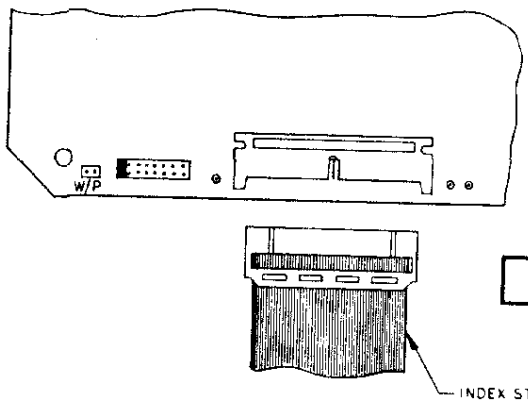

VIEW-A

(TOP-SIDE P.C.B. NOT SHOWN FOR DRAWING CLARITY)

INSTALLATION DRAWING

ITEM	PART NO.	DESCRIPTION	MANUFACTURER

MATERIAL	APPROVALS	DATE
	DESIGNER	
FINISH	DRAFTSMAN NGUYETCAO	2-25-82
	CHECKER	

TITLE: DATA CABLE CONNECTION

Cromemco incorporated

UNLESS OTHERWISE SPECIFIED DIMENSIONS ARE IN INCHES TOLERANCES ARE
FRACTIONS DECIMALS ANGLES
± XX ± ±
XXX ±

SIZE	PRODUCT	DWG TYPE	ID NUMBER	REV
C				

SCALE | SHEET | OF 1

Fig. 2

REVISIONS			
LTR	DESCRIPTION	DATE	APPD.

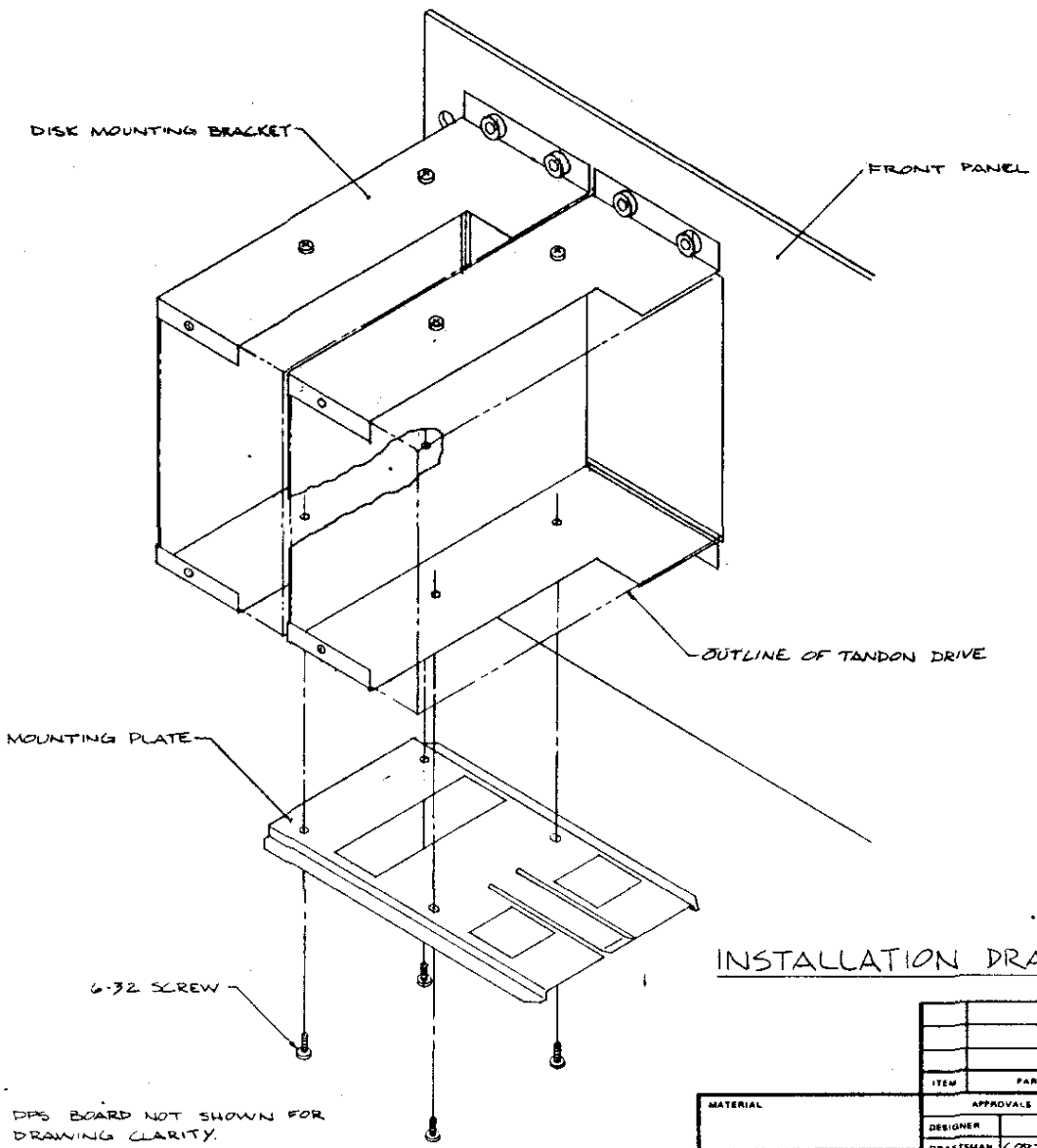

NOTE-
1. DPS BOARD NOT SHOWN FOR DRAWING CLARITY.

INSTALLATION DRAWING

ITEM	PART NO	DESCRIPTION	MANUFACTURER

MATERIAL	APPROVALS		DATE
	DESIGNER		
	DRAFTSMAN	CORTEZ	9/25/92
FINISH	CHECKER		

TITLE: SYSTEM 2 & Z2-D MOUNTING

Cromemco incorporated

UNLESS OTHERWISE SPECIFIED DIMENSIONS ARE IN INCHES
TOLERANCES ARE
FRACTIONS DECIMALS ANGLES
± .XX ± ±
.XXX ±

SIZE	PRODUCT	DWG TYPE	ID NUMBER	REV
C				—

SCALE HALF | SHEET 1 OF 1

Fig. 3

REVISIONS				
LTR	DESCRIPTION	DRAFTSMAN	DATE	APPROVAL

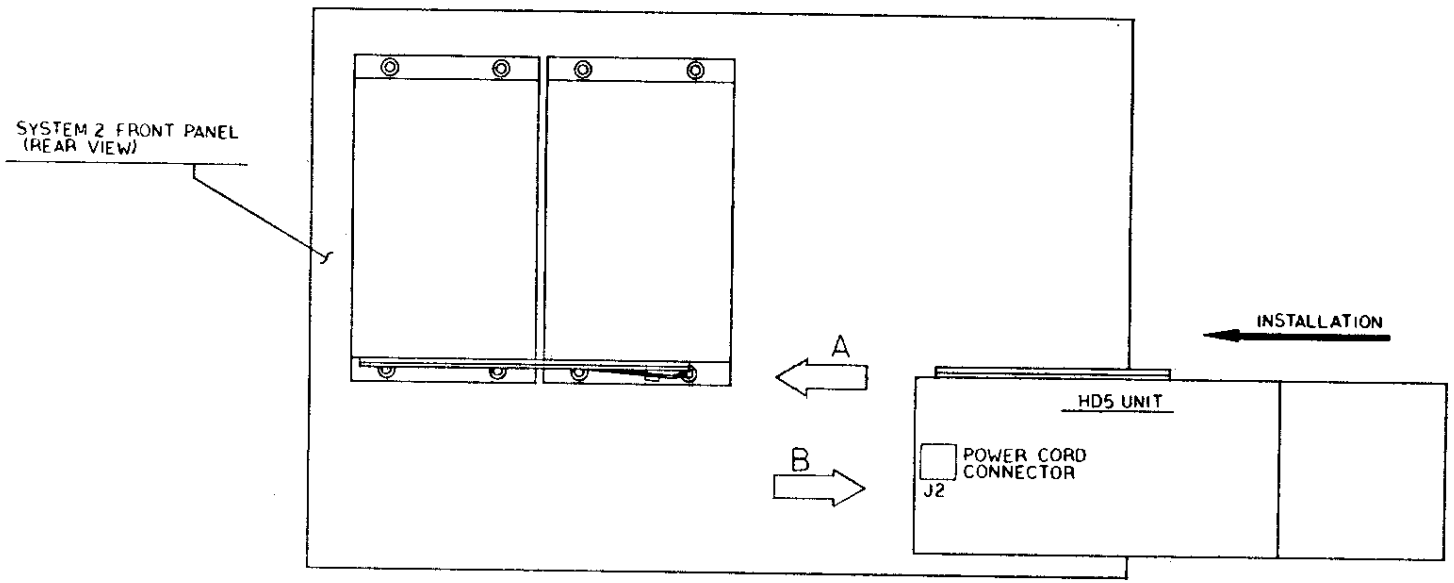

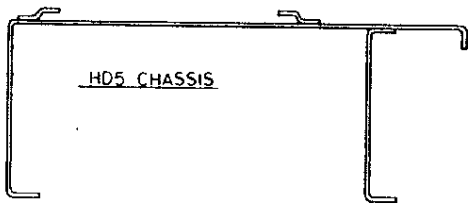

VIEW-B

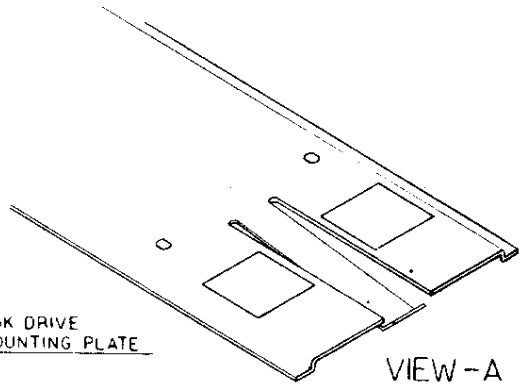

VIEW-A

Fig.4

ITEM	PART NO.	DESCRIPTION	MANUFACTURER

MATERIAL	APPROVALS		DATE
	DESIGNER		
FINISH	DRAFTSMAN	T. TAFOLLA	2/24/82
	CHECKER		

TITLE: SYSTEM TWO - HD20 MOUNTING

Cromemco incorporated

UNLESS OTHERWISE SPECIFIED DIMENSIONS ARE IN INCHES
TOLERANCES ARE
FRACTIONS DECIMALS ANGLES
± XX ±
XXX ±

SIZE	PRODUCT	DWG TYPE	ID NUMBER	REV
C				

SCALE 1:2 SHEET 1 1

NOTES:
1. INSTALL MOUNTING SCREWS FROM FRONT OF COMPUTER BELOW HD-20 MOUNTING SURFACE.
2. INSTALL HD-20 FROM FRONT.

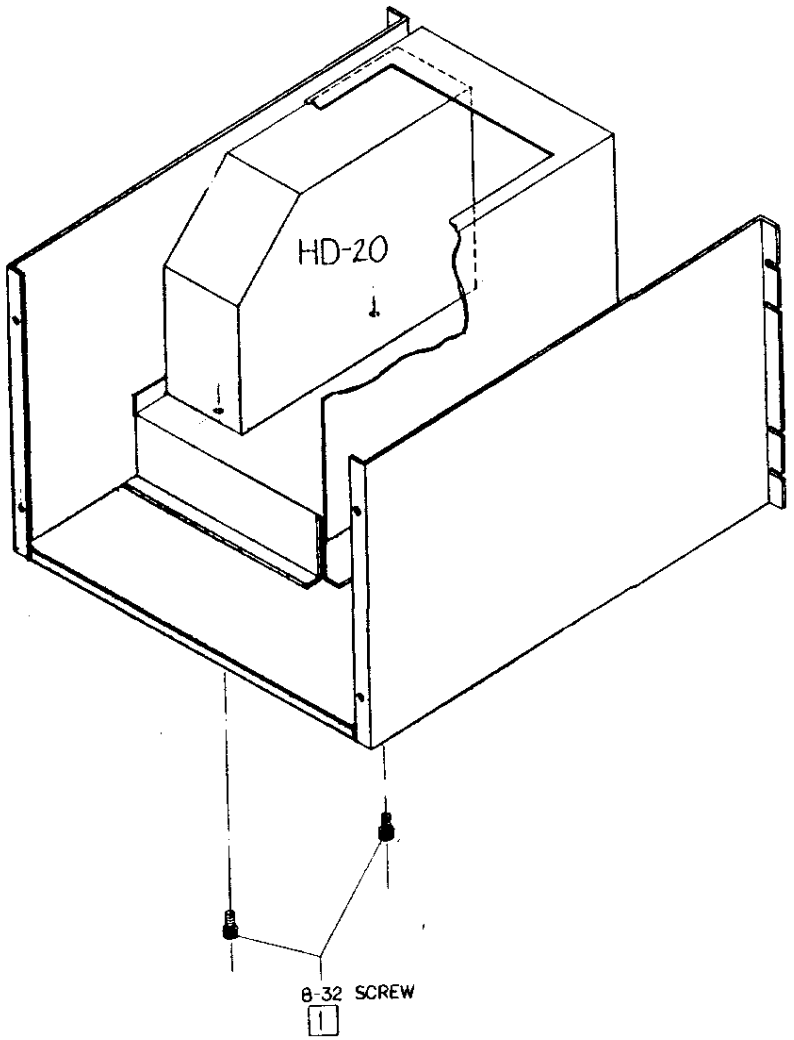

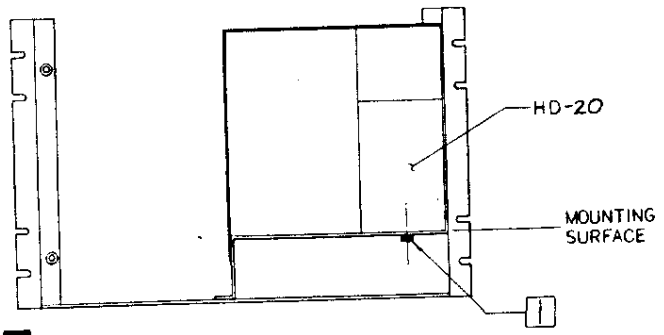

FRONT VIEW

Fig.5

INSTALLATION DRAWING

ITEM	PART NO.	DESCRIPTION	MANUFACTURER

MATERIAL: ———
FINISH: ———

APPROVALS		DATE
DESIGNER		
DRAFTSMAN	Craig Ellis	2.25.82
CHECKER		

TITLE: HD-20 MOUNTING CS 3

Cromemco incorporated

UNLESS OTHERWISE SPECIFIED DIMENSIONS ARE IN INCHES TOLERANCES ARE: FRACTIONS DECIMALS ANGLES ± — .XX ± — ± — .XXX ± —

SIZE	PRODUCT	DWG TYPE	ID NUMBER	REV
C				

SCALE 1:4 SHEET OF

REVISIONS				
LTR	DESCRIPTION	DRAFTSMAN	DATE	APPROVAL

NOTES -

1. SOME ITEMS DELETED FROM REAR PANEL FOR DRAWING CLARITY.
2. WIRE LENGTHS OF POWER CABLE NOT DRAWN TO ANY SCALE.

INSIDE VIEW OF REAR PANEL

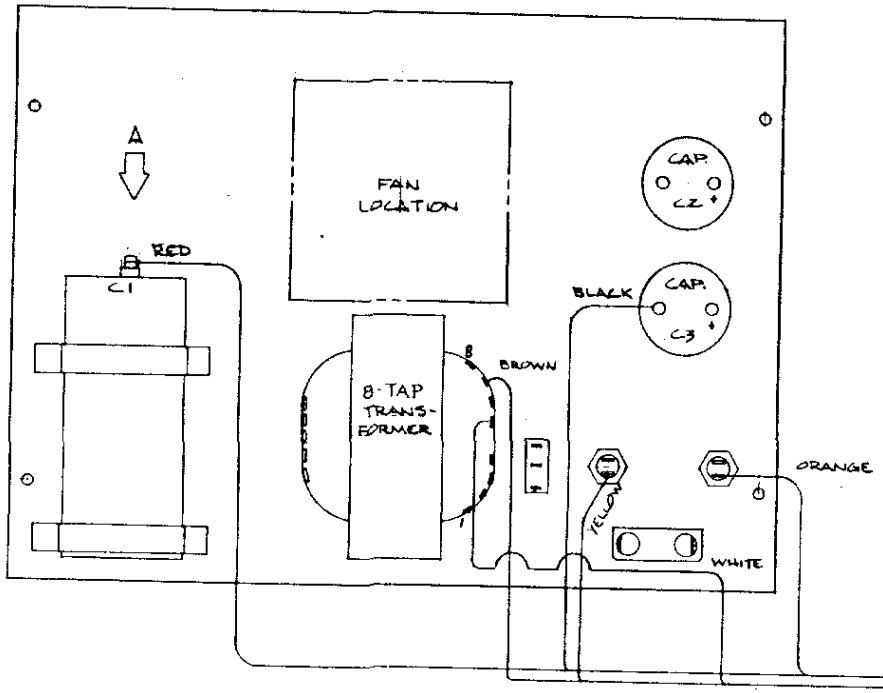

POWER CABLE HOOK-UP		
WIRE COLOR	FROM	TO
ORANGE	P1	+18V FUSEHOLDER
BLACK	"	C3 (NEG TERM.)
RED	"	C1 (POS. TERM.)
BROWN	"	AC 115V
WHITE	"	AC NEUTRAL
YELLOW	"	-18V FUSEHOLDER

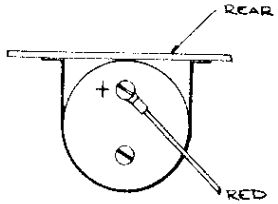

VIEW "A"
SCALE - 1:2

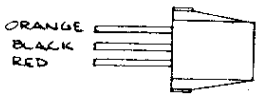

VIEW "B"
SCALE - 1:1

VIEW "C"
SCALE - 1:1

INSTALLATION DRAWING

ITEM	PART NO	DESCRIPTION	MANUFACTURER
1	519-0124	INPUT POWER CABLE - HD5	

MATERIAL	APPROVALS		DATE
	DESIGNER		
FINISH	DRAFTSMAN	LOPEZ	7/15/83
	CHECKER		

TITLE: HD-20 INPUT POWER CABLE, SYSTEM 3 APPLICATION

Cromemco incorporated

UNLESS OTHERWISE SPECIFIED DIMENSIONS ARE IN INCHES
TOLERANCES ARE
FRACTIONS DECIMALS ANGLES
± XX ± ±
XXX ±

SIZE	PRODUCT	DWG TYPE	ID NUMBER	REV
C				

SCALE HALF (1:2) SHEET 1 OF 1

Fig.6

Technical Bulletin

Cromemco Inc.
280 Bernardo Avenue
Mountain View, CA 94043
(415) 964-7400
TWX 910-379-6338

CONVERTING HD20 TO ST506 INTERFACE

Summary

The modifications outlined in this Technical Bulletin allow the existing 20 MByte IMI 5021H to be converted to use the ST506 Interface as opposed to the IMI bus interface. The procedure will cover 20MByte drives installed in either the HD-20, or CS-1H products. Completion of this modification allows the use of Cromemco's new STDC Controller Board which greatly enhances the performance of the drive, plus provides a slightly larger capacity due to the STDC method of formatting.

Materials Required

Retrofit Kit HD21K-A or HD21K-B
STDC Disk Controller Card

Note: STDC Card is not included in upgrade kits and must be purchased separately.

Material List - Kit HD21K-A (CS-1H)

Technical Bulletin (023-9143)
IMI 5021 ST506 Read/Write Board (P/N 410-0450)
STDC Read/Write Cable (P/N 519-0191)
STDC Control and Status Cable (P/N 519-0190)
Power Supply connector (P/N 519-0199)

Material List - Kit HD21K-B (CS-2 & CS-3 with HD-20)

Technical Bulletin (023-9143)
IMI 5021 ST506 Read/Write Board (P/N 410-0450)
STDC Read/Write Cable (P/N 519-0195)
STDC Control and Status Cable (P/N 519-0194)
Power Supply connector (P/N 519-0201)

Procedure

1. Turn off the power to the system, and remove the line cord before proceeding.

2. Remove the WDI-II card and the associated data cable from the system (CS-1,2 OR 3).

3. Remove the HD20 module from Systems Two or Three by following the instructions in the HD-20 manual (023-6042).

4. Remove the hard disk drive from the CS1H by following the front panel disassembly instructions in the System One manual (023-6022).

5. For CS-1H systems, replace the power supply cable with the new power cable provided (519-0199) and proceed to Step 9.

6. To upgrade an HD20 module, remove both the HD20 power supply and the IMI 5021H drive by following the instructions in the HD20 manual (023-6042).

7. De-solder and remove the disk drive power cable from the HD20 power supply board connector J2.

8. Connect the new disk drive power supply cable (519-0201) by soldering the purple wire (Cable Pin 1) to Connector J2, Pin 1 on the power supply board. Connect black wire (Cable Pin 3) to Connector J2, Pin 2 on the power supply board. Connect the second black wire (Cable Pin 2) to Connector J2, Pin 4 on the power supply board. Connect the red wire (Cable Pin 4) to Connector J2, Pin 6 on the power supply board.

Caution: Use extreme care when performing the following steps. Failure to follow the recommended procedure exactly could cause damage to the drive.

9. Referring to figure 1, separate Read/Write cable from existing WDI-II Read/Write board using a flat bladed screw driver while board is still attached to the drive housing. Remove three stand-offs securing the existing WDI-II Read/Write board to the drive housing. Carefully lift the WDI-II Read/Write board away from Motor Control board connector and tilt the board away from the drive housing.

10. Carefully disconnect stepper motor cable from the WDI-II Read/Write board.

11. To install the new ST506 Read/Write Board, connect the stepper motor cable. Guide the Read/Write board into the drive housing, carefully lining up the Motor Control board connector with the socket on the ST506 Read/Write board. Secure the ST506 Read/Write board with the three stand offs. Carefully reconnect the Read/Write cable with a flat blade screw driver after the board is attached to the base. This technique is required to prevent damaging the flat cable or connector contacts.

12. The ST506 interface card is factory set to respond as drive 0 (DS-1). See figure 3 for the jumper settings to cause the drive to respond other than drive 0. Place a jumper in the desired location after removing the existing jumper located between pins 1 and 16.

13. Re-install the drive into the CS1H or HD20 cabinet. Route the Read/Write cable and the Control Status cable as the WDI II data cable had been routed. See figure 2 for cable connections. Install the STDC Controller board and connect the Read/Write and control cables. Connect this board last in the priority chain as described in the STDC Manual.

This completes the upgrade of the IMI 5021H drive to the ST506 configuration. Perform the checkout procedures for an STDC system as outlined in the STDC Manual (P/N 023-2031).

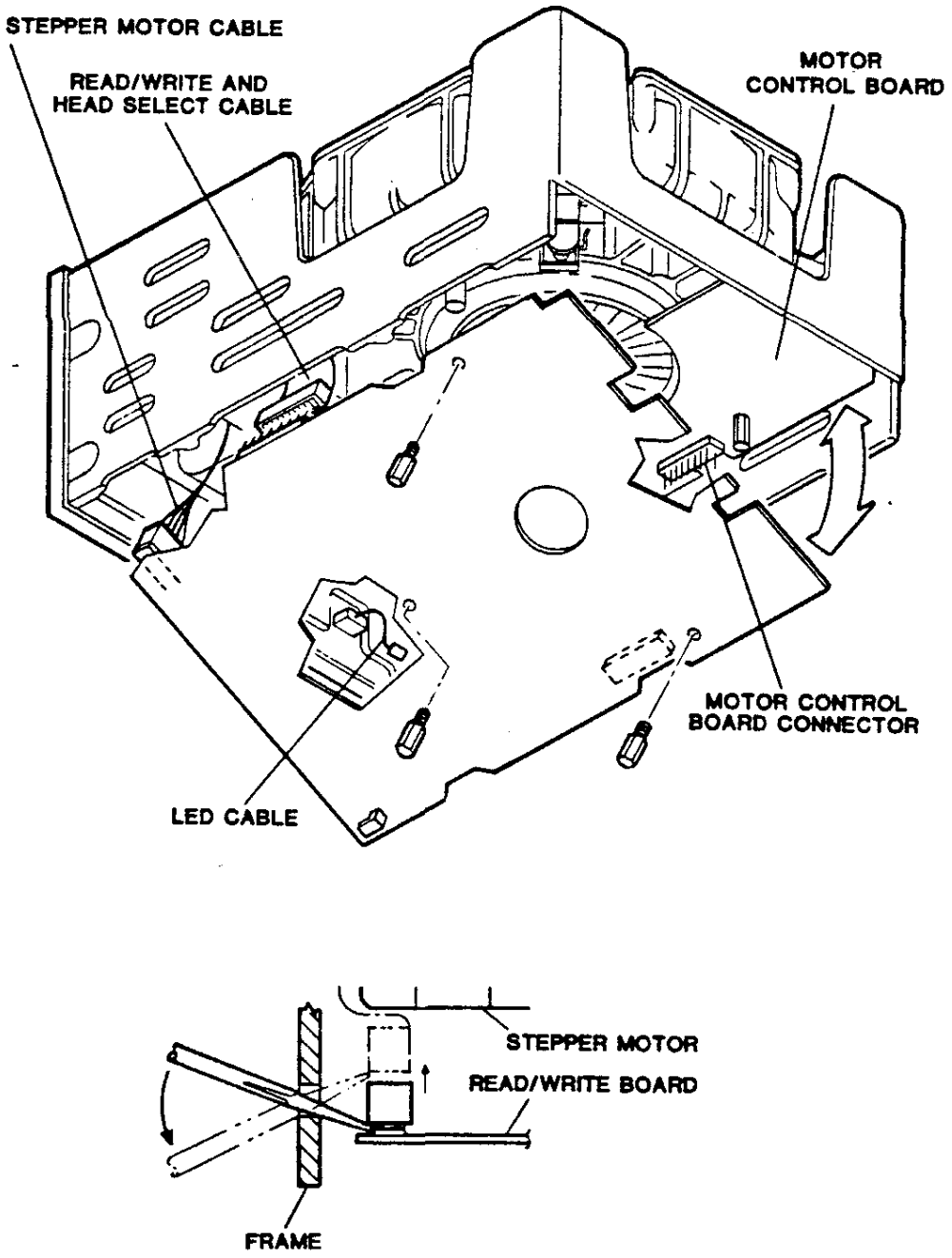

Figure 1: READ/WRITE BOARD REMOVAL AND REPLACEMENT

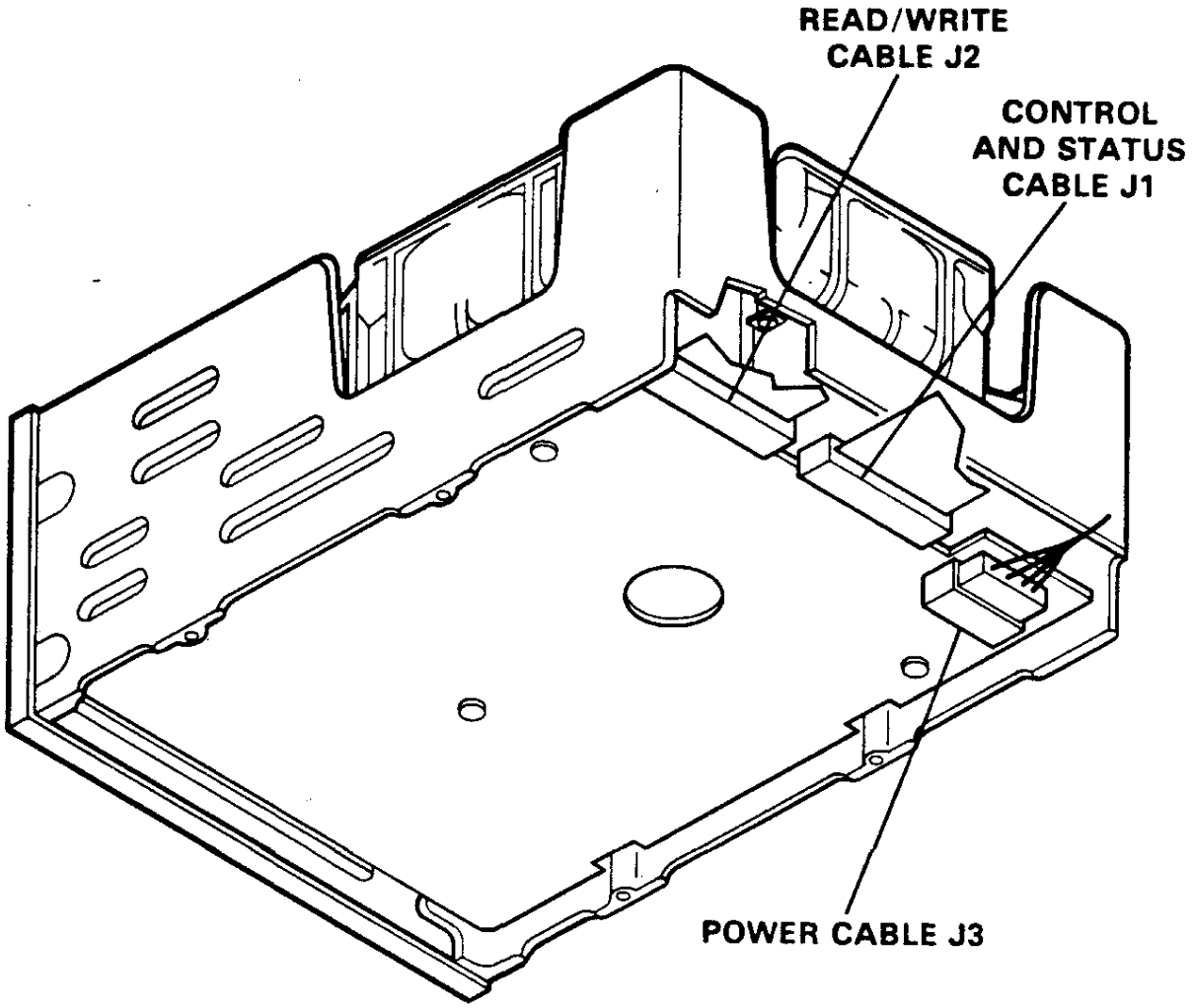

Figure 2: INTERFACE CONNECTOR PHYSICAL LOCATIONS
IMI 5021H DRIVE

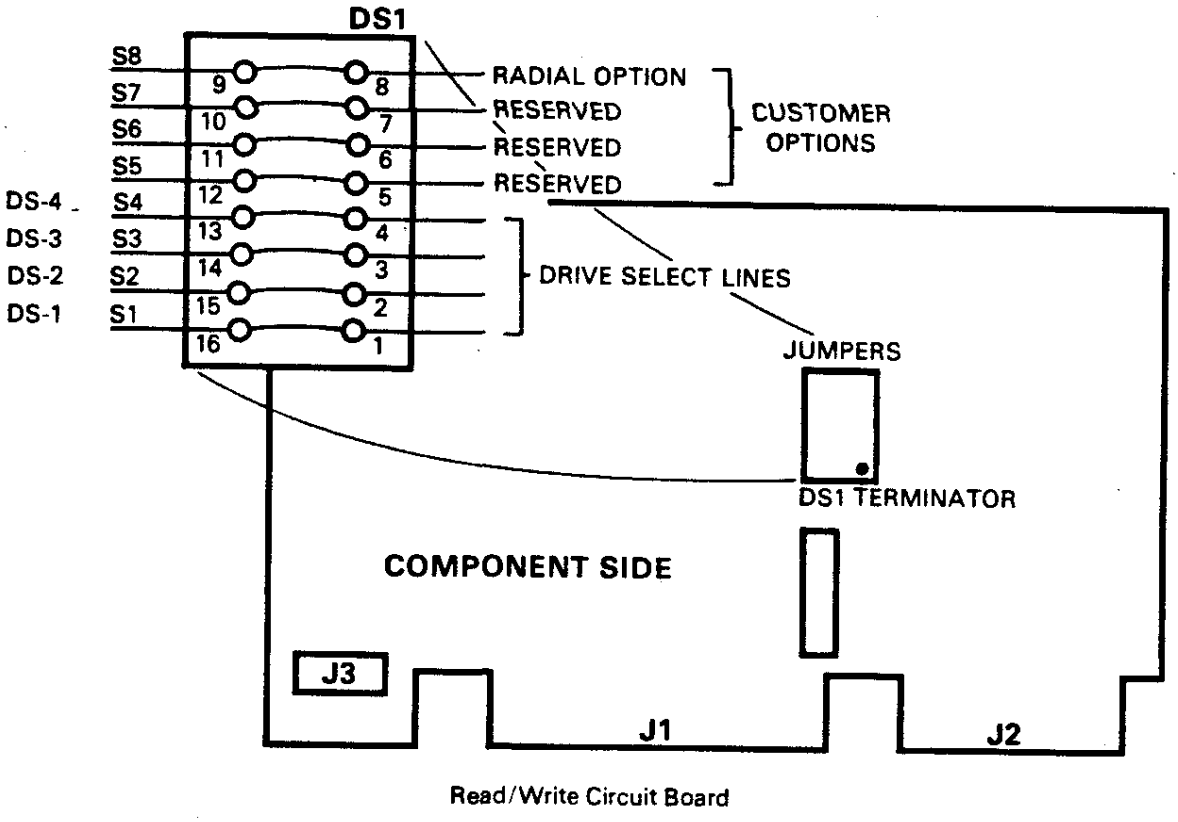

Figure 3: DRIVE SELECTION OPTIONS
IMI 5021H